Data-driven modeling in linear dynamic networks

Paul Van den Hof

co-authors: Arne Dankers and Harm Weerts

University of Newcastle, NSW, Australia, 5 December 2017

European Research Council

Technische Universiteit Eindhoven University of Technology

Where innovation starts

Introduction – dynamic networks

Decentralized process control

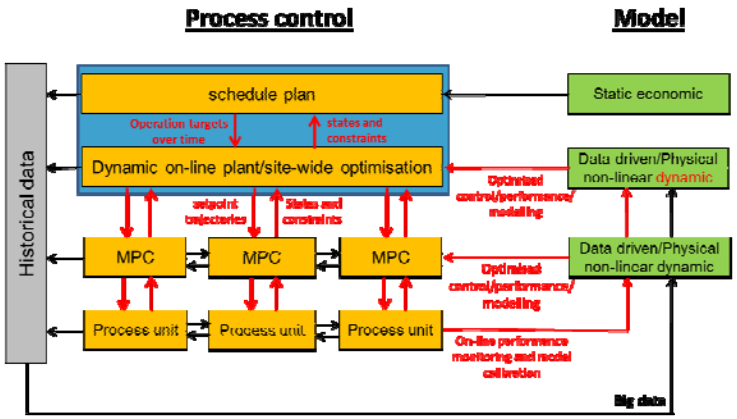

Power grid

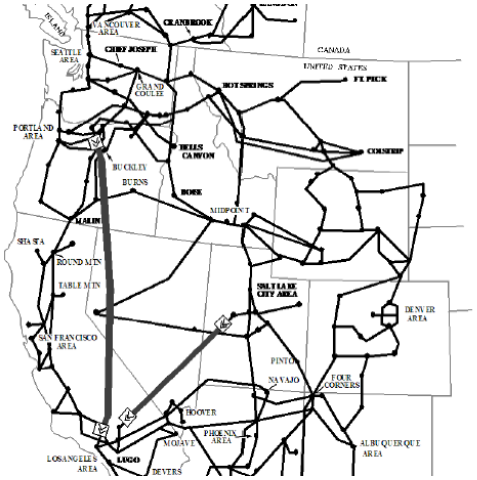

Pierre et al. (2012)

Metabolic network

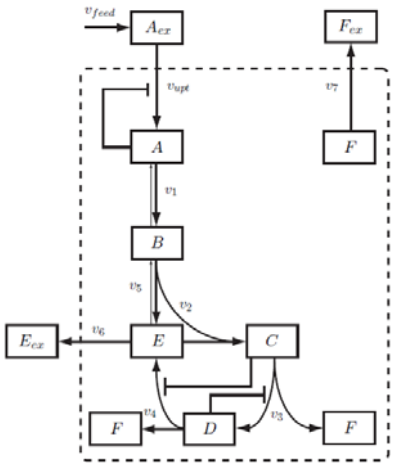

Hillen (2012)

Distributed control (robotic networks)

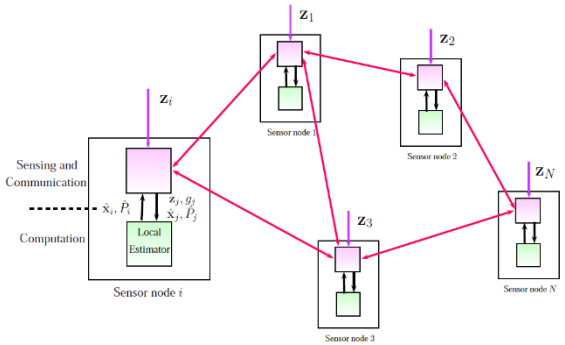

Simonetto (2012)

Stock market

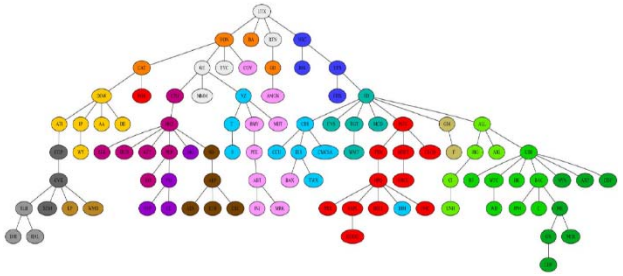

Materassi et al. (2010)

Technische Universiteit Eindhoven University of Technology

Introduction – dynamic networks

Dynamical systems are considered to have a more complex structure:

distributed control system (1d-cascade)

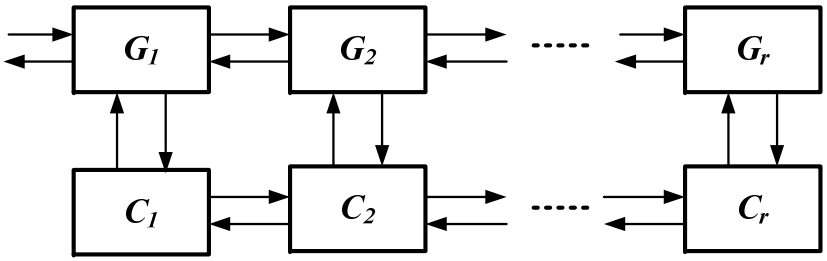

dynamic network

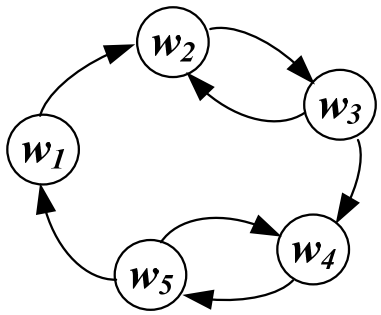

(distributed MPC, multi-agent systems, biological networks, smart grids,…..)

For on-line monitoring / control / diagnosis it is attractive to be able to ***identify***

- (changing) dynamics of modules in the network
- (changing) interconnection structure

Introduction – identification

The classical (multivariable) identification problems: [Ljung (1999)]

open loop

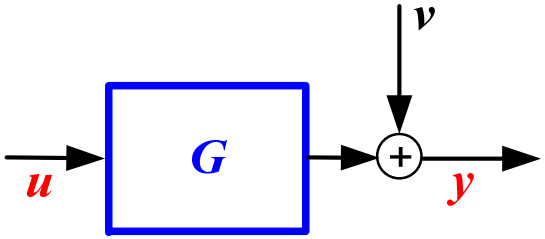

closed loop

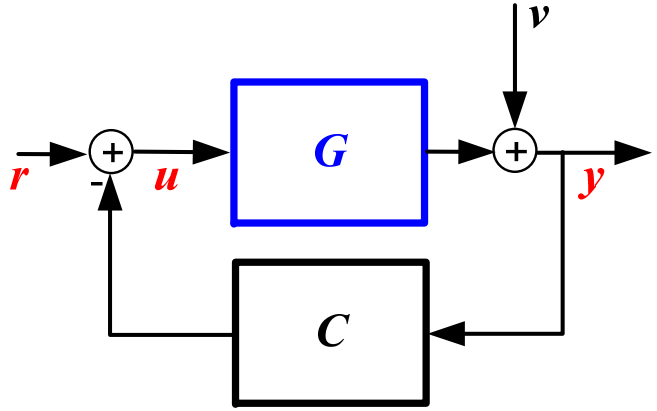

Identify a plant model $\hat{G}$ on the basis of measured signals *u, y* *(*and possibly *r)*

We have to move from a fixed and known configuration to deal with and exploit ***structure*** in the problem.

Contents

Dynamic network: what is it?

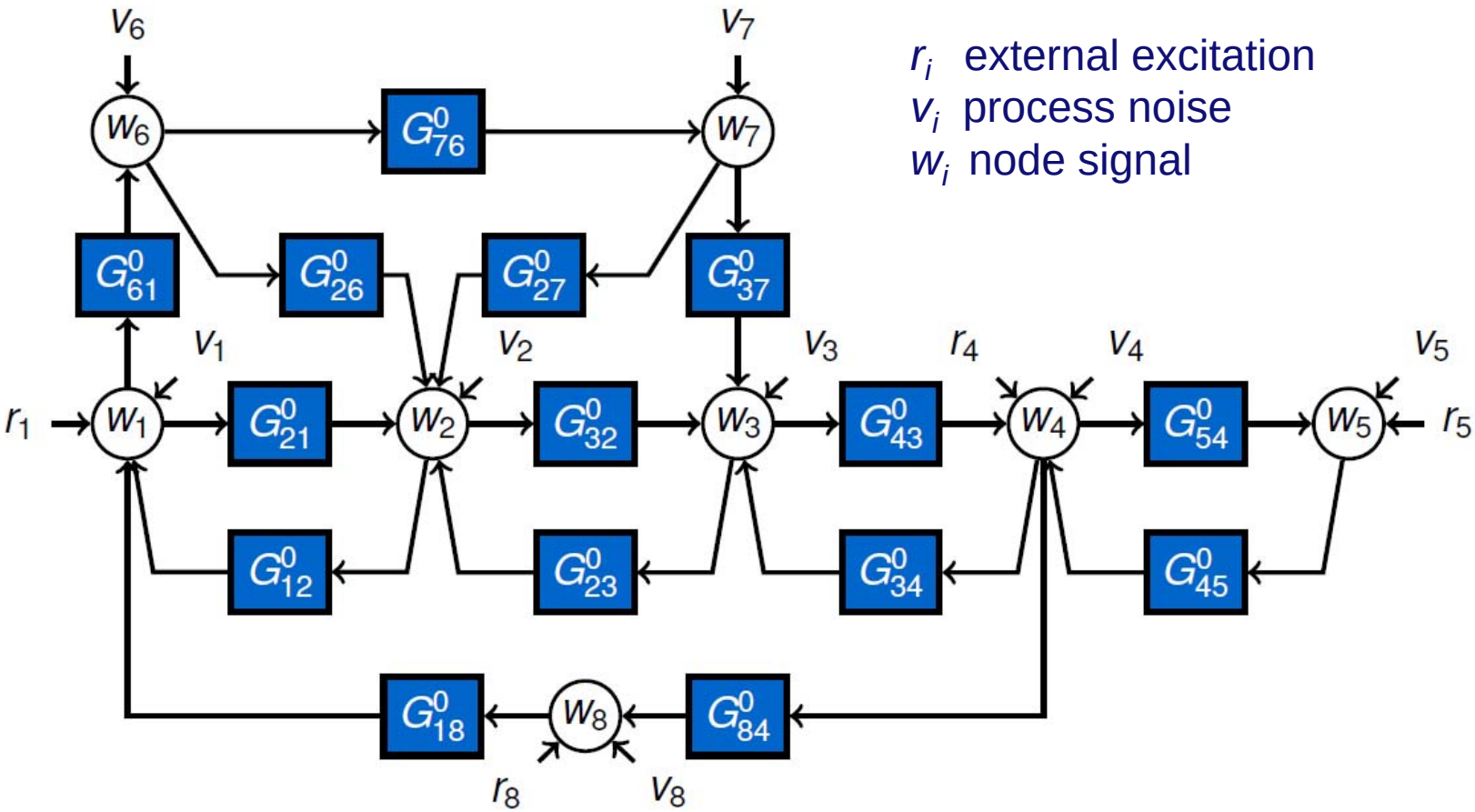

r_i external excitation
v_i process noise
w_i node signal

Dynamic network: what is it?

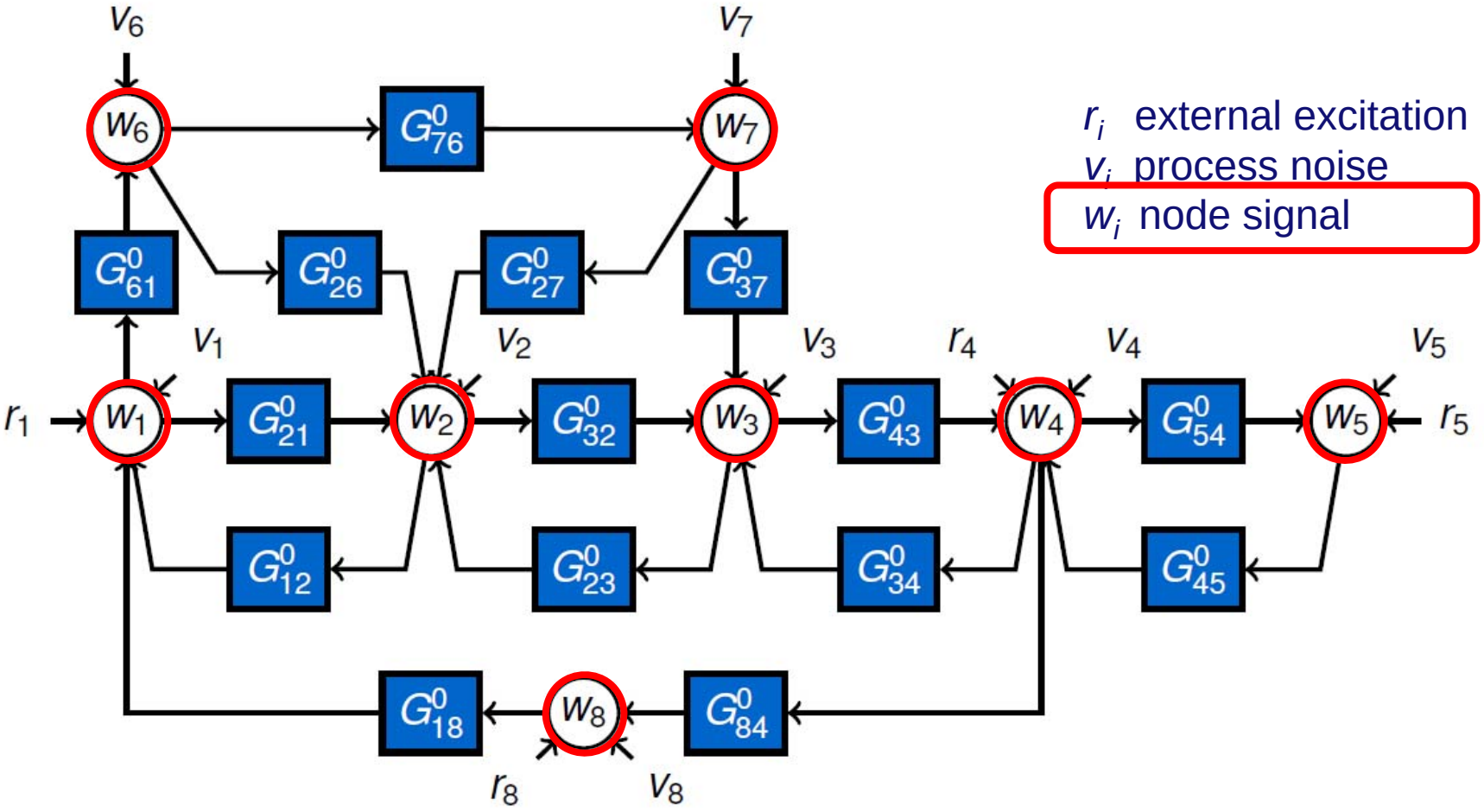

r_i external excitation
v_i process noise
w_i node signal

Dynamic network: what is it?

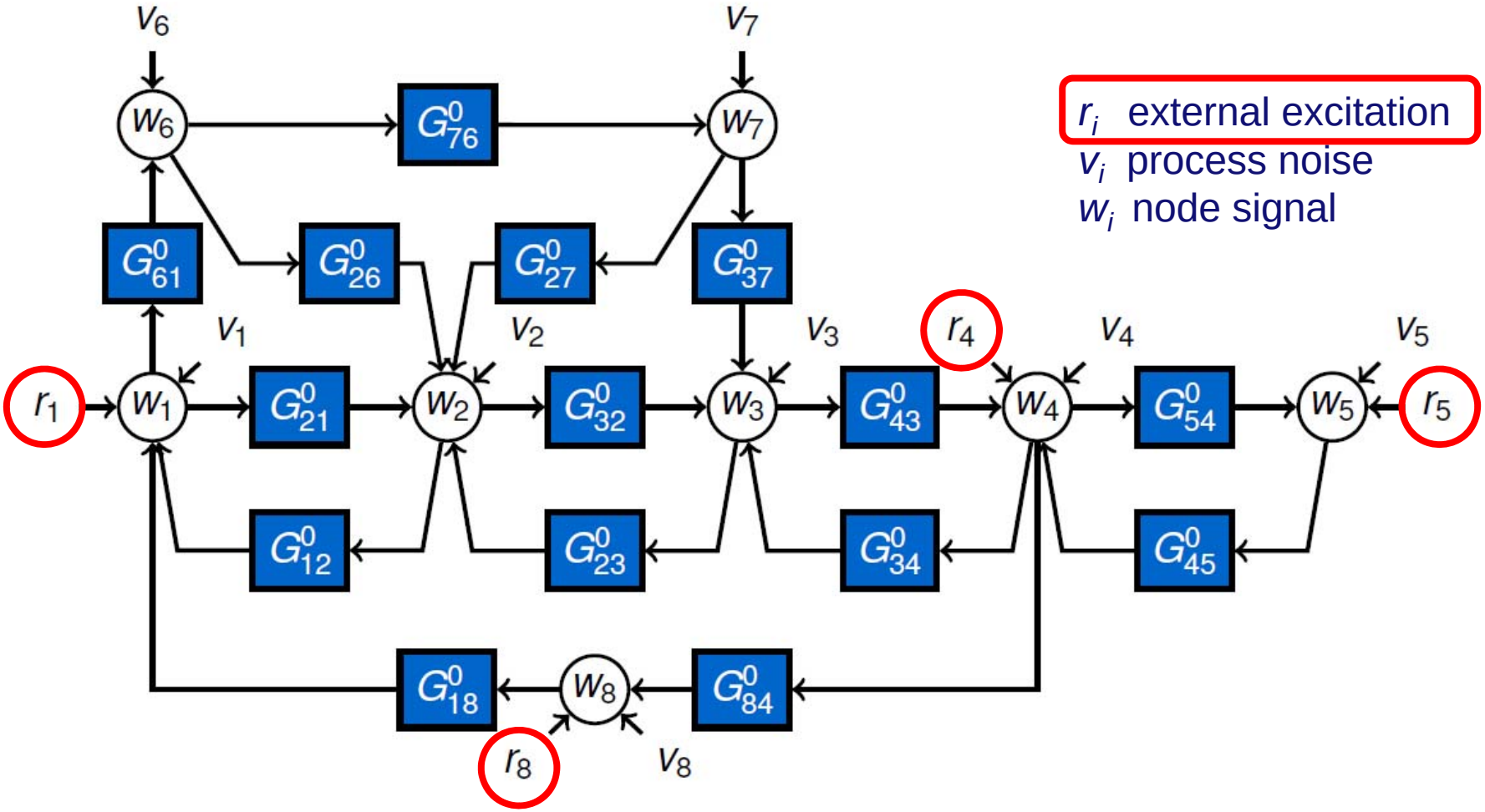

r_i external excitation
v_i process noise
w_i node signal

Dynamic network: what is it?

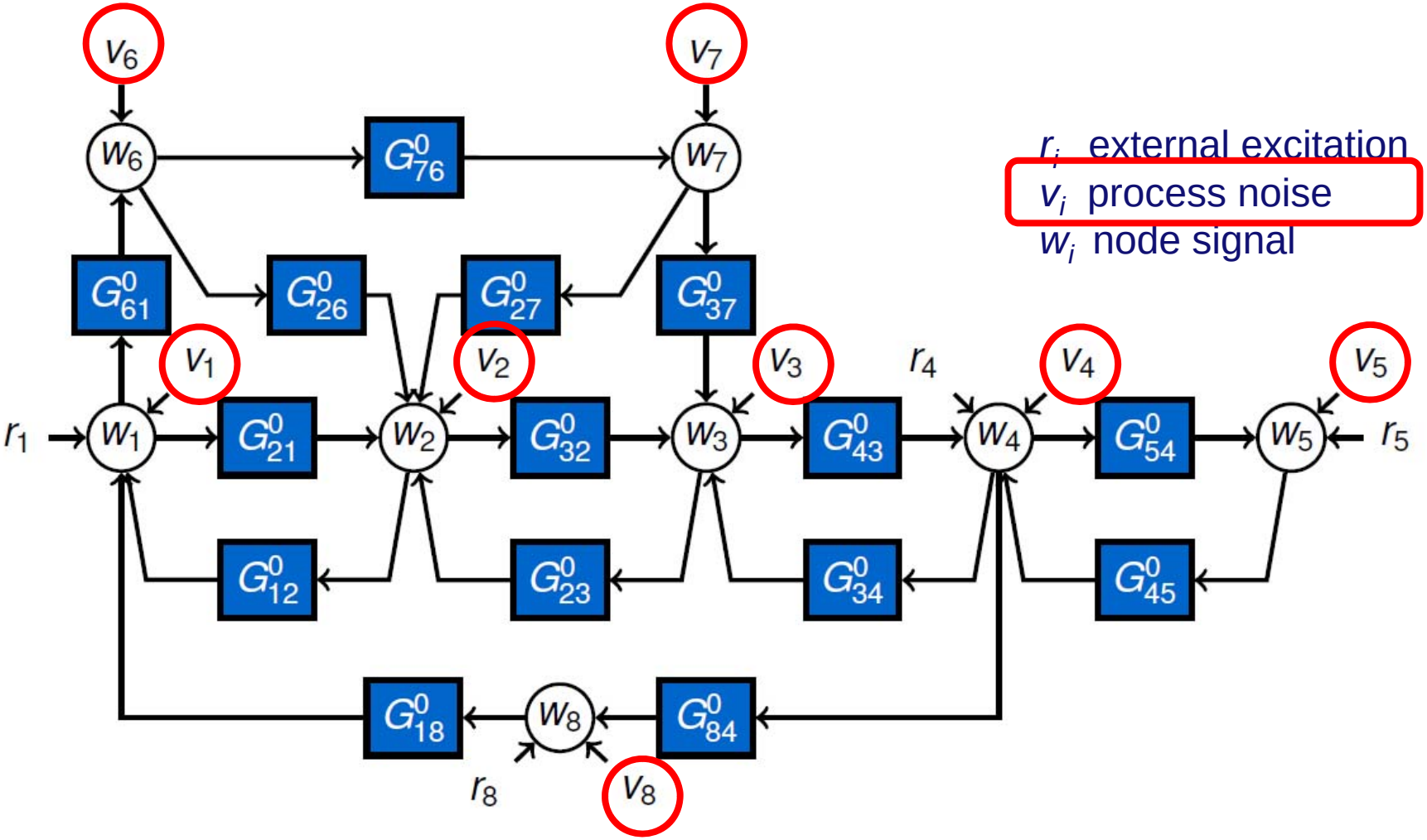

r_i external excitation

v_i process noise

w_i node signal

Network Setup

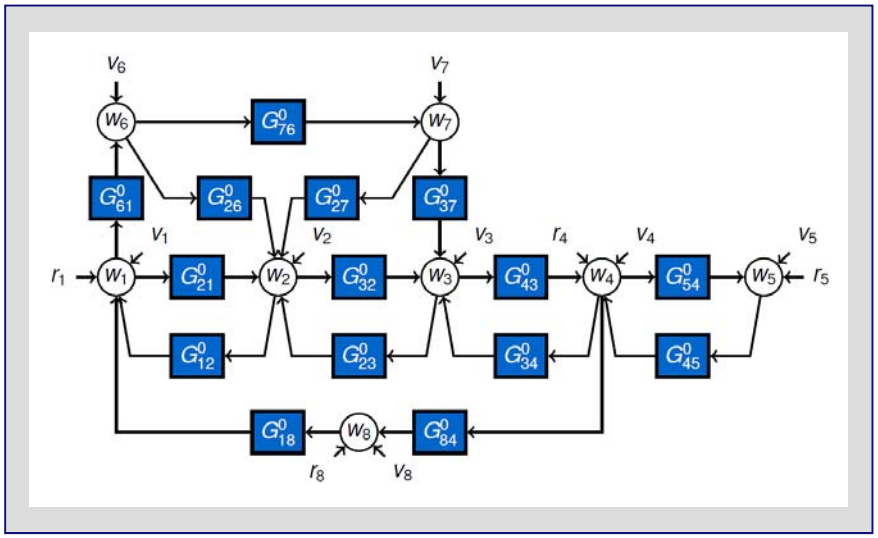

Assumptions:

- Total of *L* nodes
- Network is well-posed and stable
- Modules may be unstable
- Node signals and excitation signals can be measured

$$\begin{bmatrix} w_1 \\ w_2 \\ \vdots \\ w_L \end{bmatrix} = \underbrace{\begin{bmatrix} 0 & G^0_{12} & \cdots & G^0_{1L} \\ G^0_{21} & 0 & \ddots & G^0_{2L} \\ \vdots & \ddots & \ddots & \vdots \\ G^0_{L1} & G^0_{L2} & \cdots & 0 \end{bmatrix}}_{G^0} \begin{bmatrix} w_1 \\ w_2 \\ \vdots \\ w_L \end{bmatrix} + \begin{bmatrix} r_1 \\ r_2 \\ \vdots \\ r_L \end{bmatrix} + \begin{bmatrix} v_1 \\ v_2 \\ \vdots \\ v_L \end{bmatrix}$$

$$w = G^0 w + r + v \qquad\qquad w = (I - G^0)^{-1}(r + v)$$

- P.M.J. Van den Hof, A.G. Dankers, P.S.H. Heuberger and X. Bombois. *Automatica, 49*, 2994-3006, 2013.

The single module identification problem

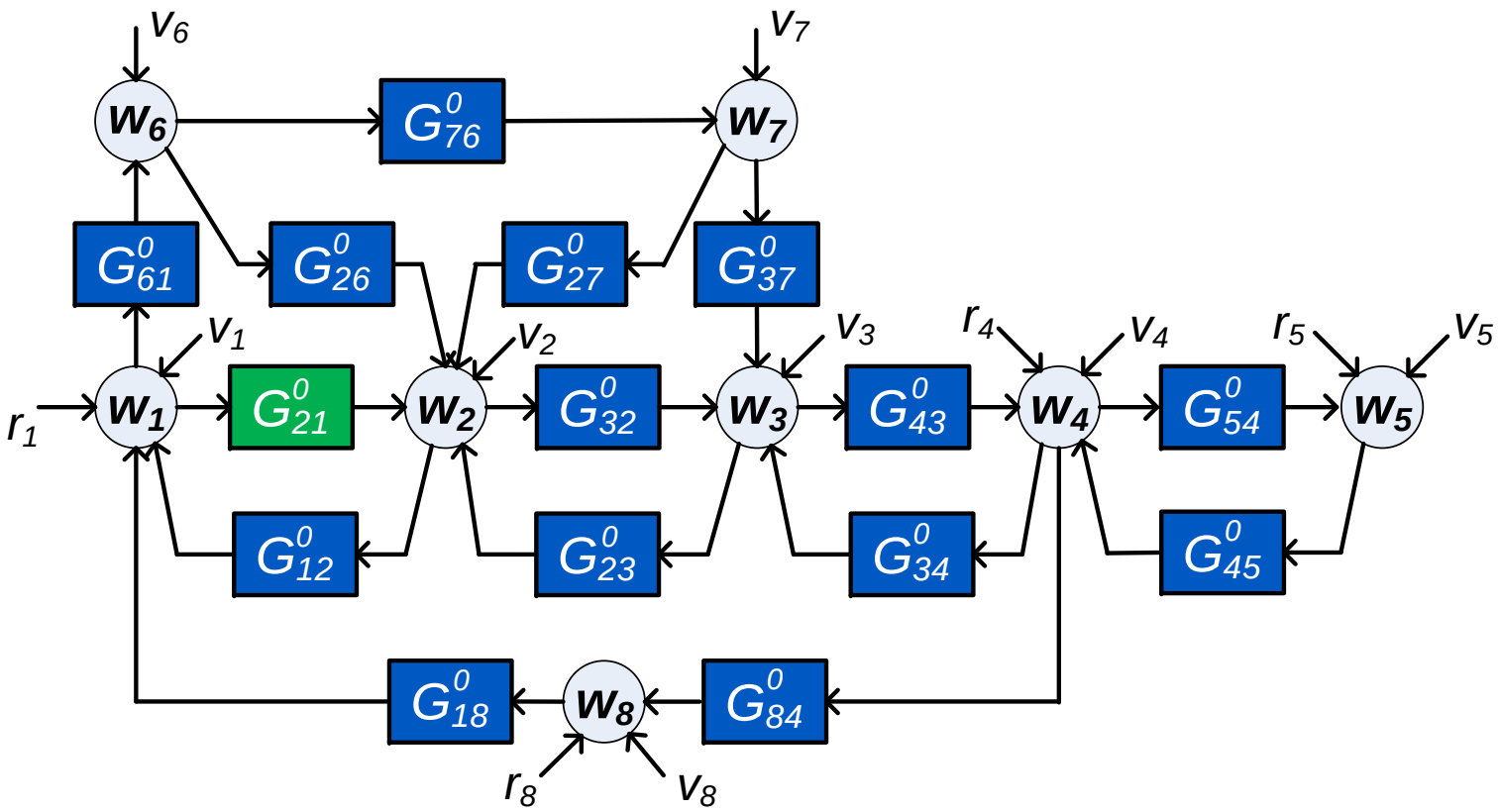

- Identify G^0_{21} on the basis of measured signals
- Which signals to measure?

The single module identification problem

Options for identifying a module:

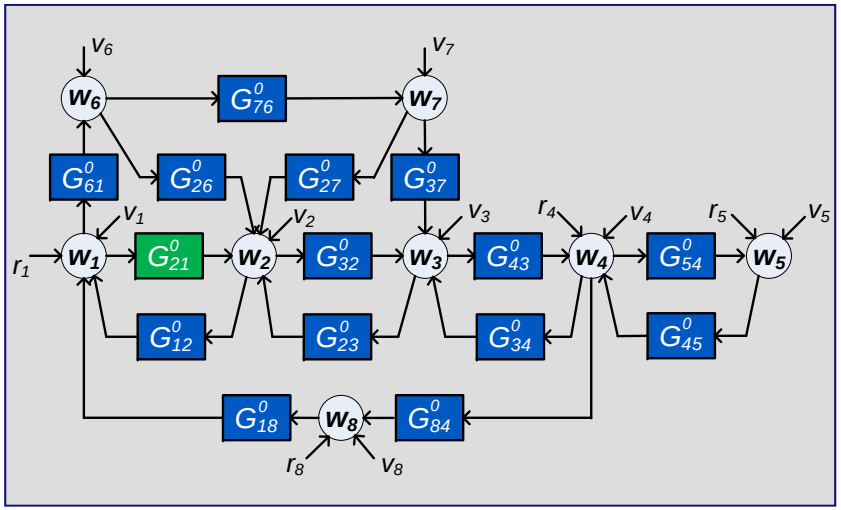

- Identify the full MIMO system:

$$w = (I - G^0)^{-1}[r + v]$$

from measured r and w .

Global approach with “standard” tools

- Identify a local (set of) module(s) from a (sub)set of measured r_k and w_ℓ

Local approach with “new” tools and structural conditions

The single module identification problem

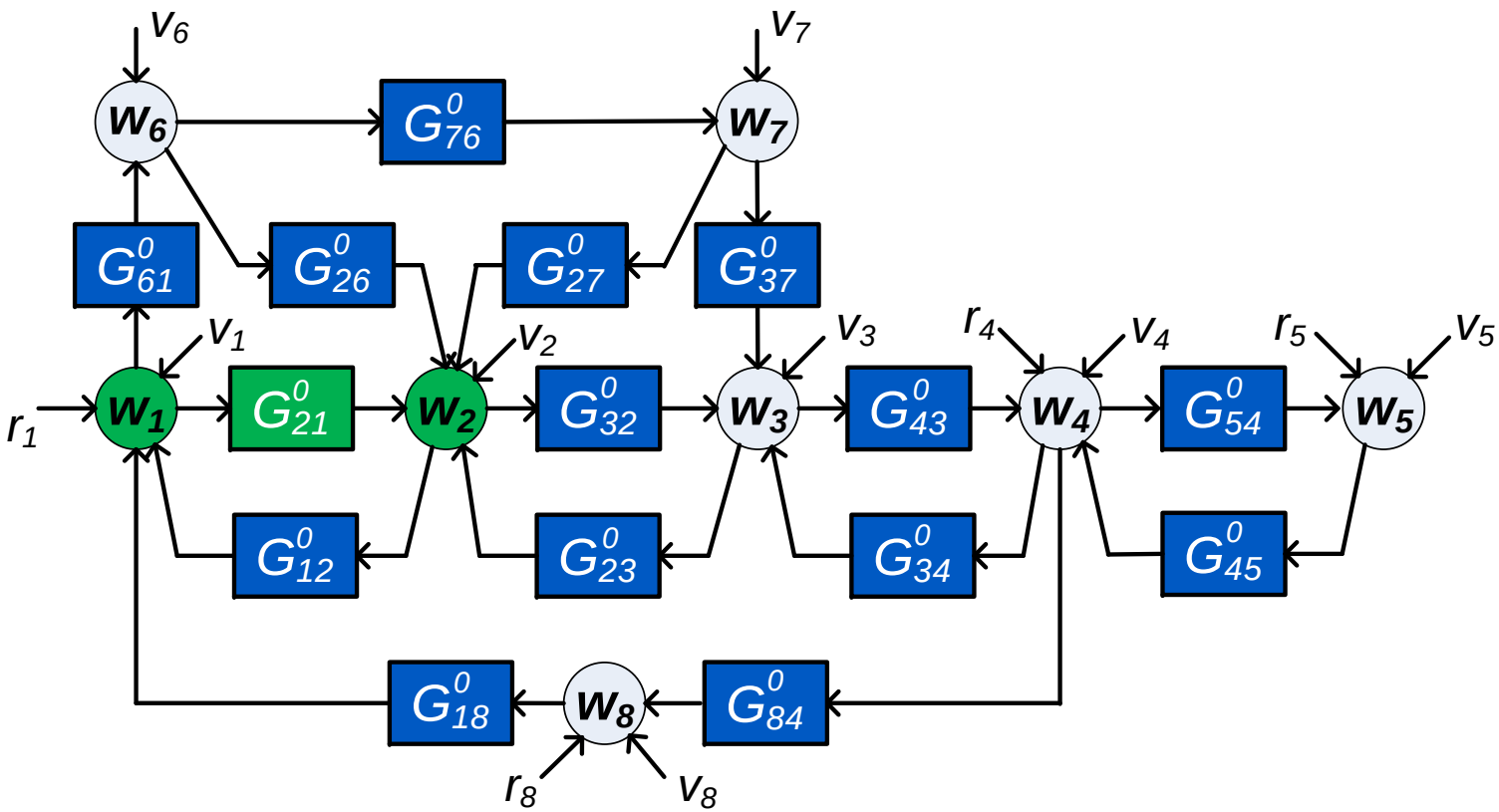

- Identifiying G^0_{21} is part of a 4-input, 1 output problem

The single module identification problem

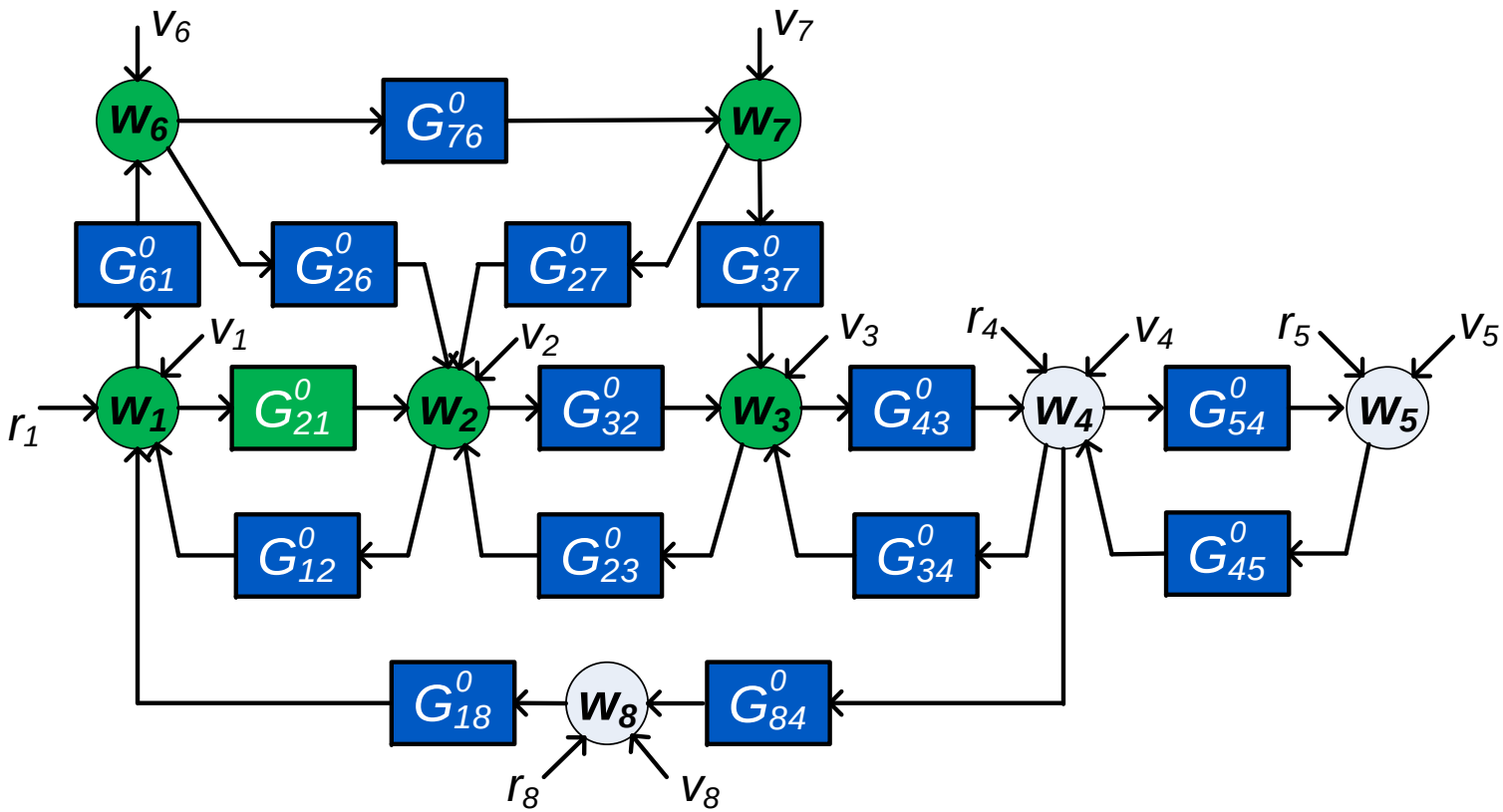

- Identifiying G^0_{21} is part of a 4-input, 1 output problem

The single module identification problem

So far:

Techniques typically based on (adapted) versions of closed-loop identification methods

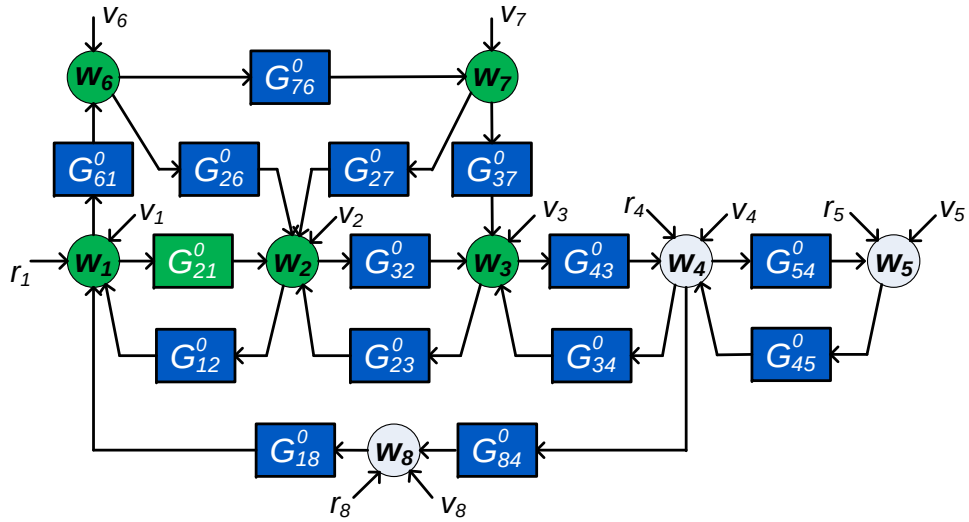

- **Direct method** (based on measured node signals only)
  - ML properties
  - Disturbances uncorrelated over channels
- **2-stage/projection/IV method** (including measurements of $r_i's$)
  - Consistency; no need for noise models; no ML
  - Enough excitation signals that affect inputs but not output

The single module identification problem

4 input nodes to be measured:

Can we do with less?

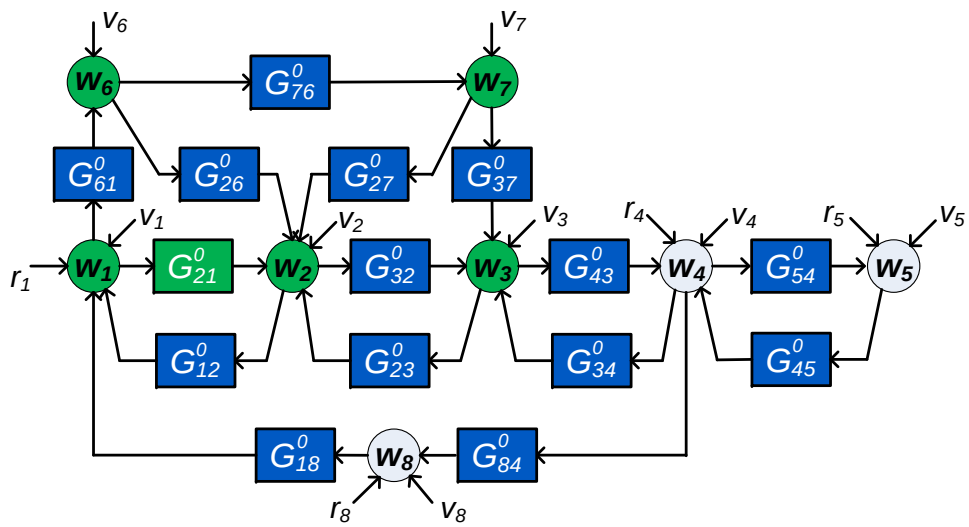

Network immersion

- An **immersed network** is constructed by removing node signals, but leaving the remaining node signals invariant
- Modules and disturbance signals are adapted

The single module identification problem

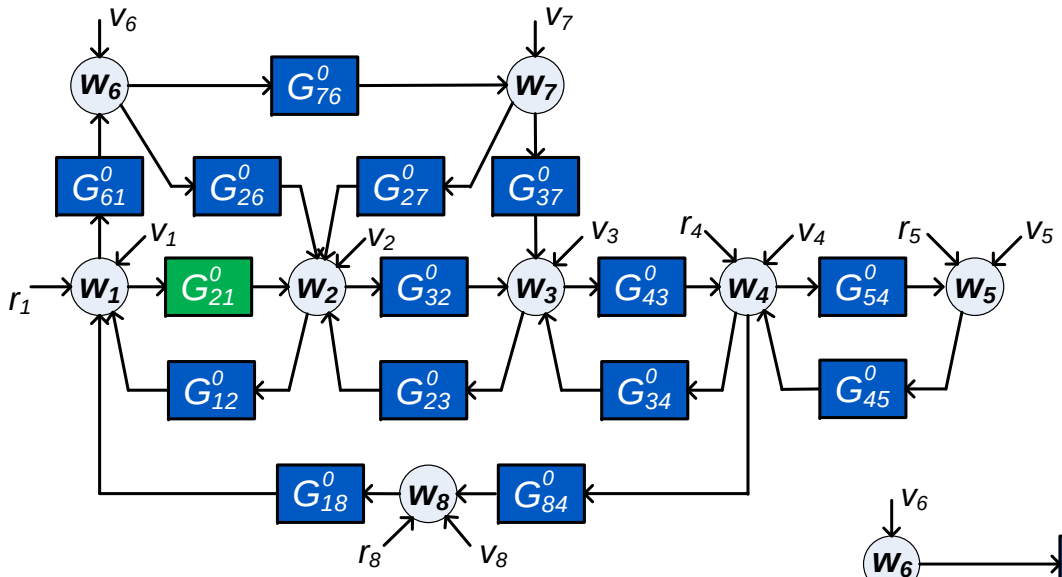

Immersing w_7

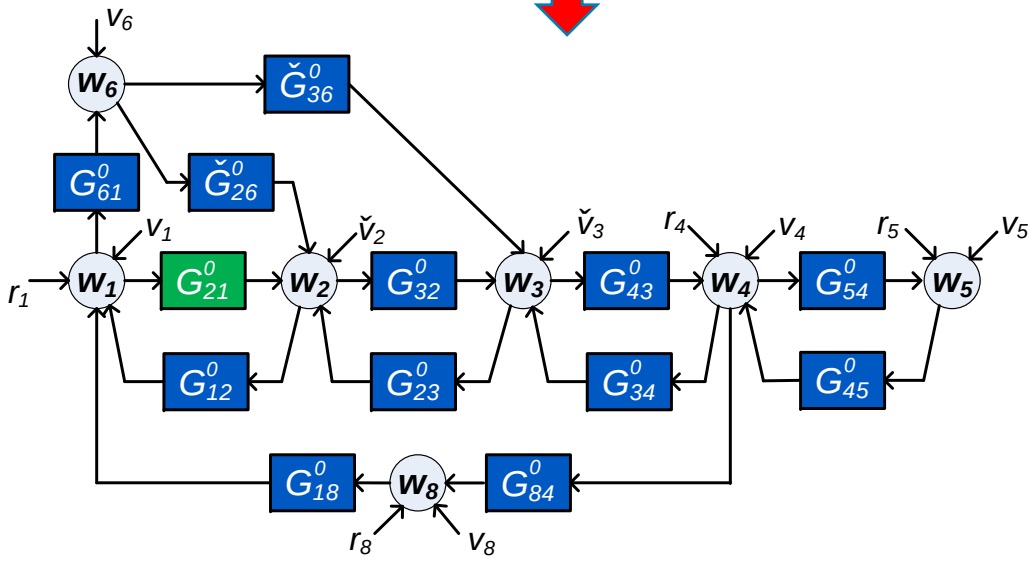

When does immersion leave G^0_{21} invariant?

The single module identification problem

When does immersion leave G_{21}^0 invariant?

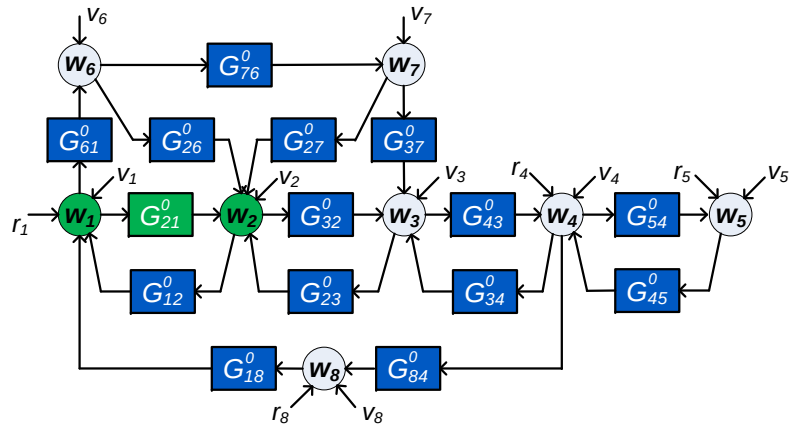

Proposition

Consider an immersed network where w_1 and w_2 are retained. Then $\check{G}_{21}^0 = G_{21}^0$ if

a) Every path $w_1 \rightarrow w_2$ other than the one through G_{21}^0 goes through a measured node. (parallel paths)

b) Every path $w_2 \rightarrow w_2$ goes through a measured node (loops around the output)

- A.G. Dankers, P.M.J. Van den Hof, A.G. Dankers, X. Bombois and P.S.C. Heuberger, *IEEE Trans. Automatic Control, 61*, 937-952, 2016.

The single module identification problem

parallel paths, and loops around the output

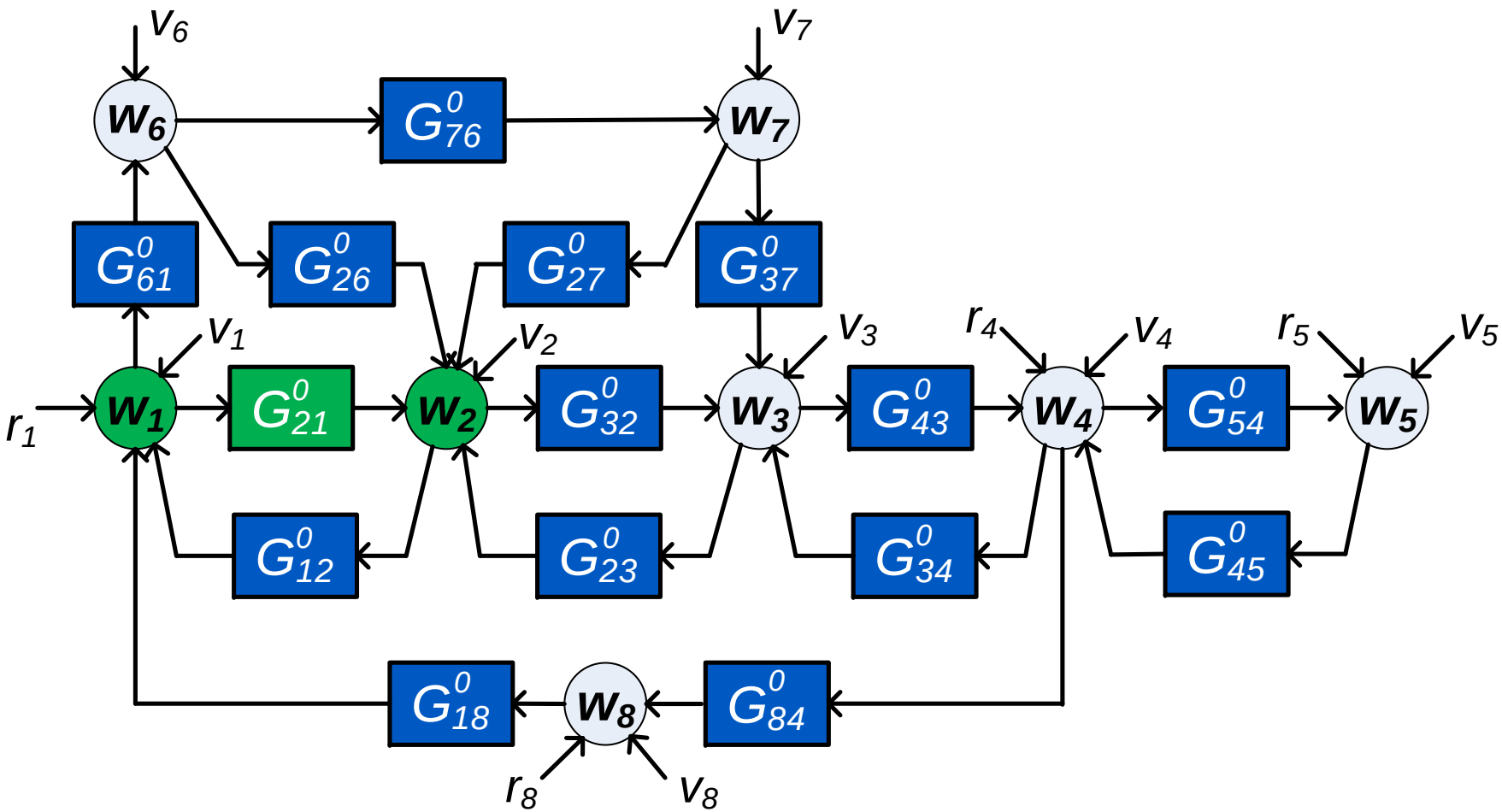

The single module identification problem

parallel paths, and loops around the output

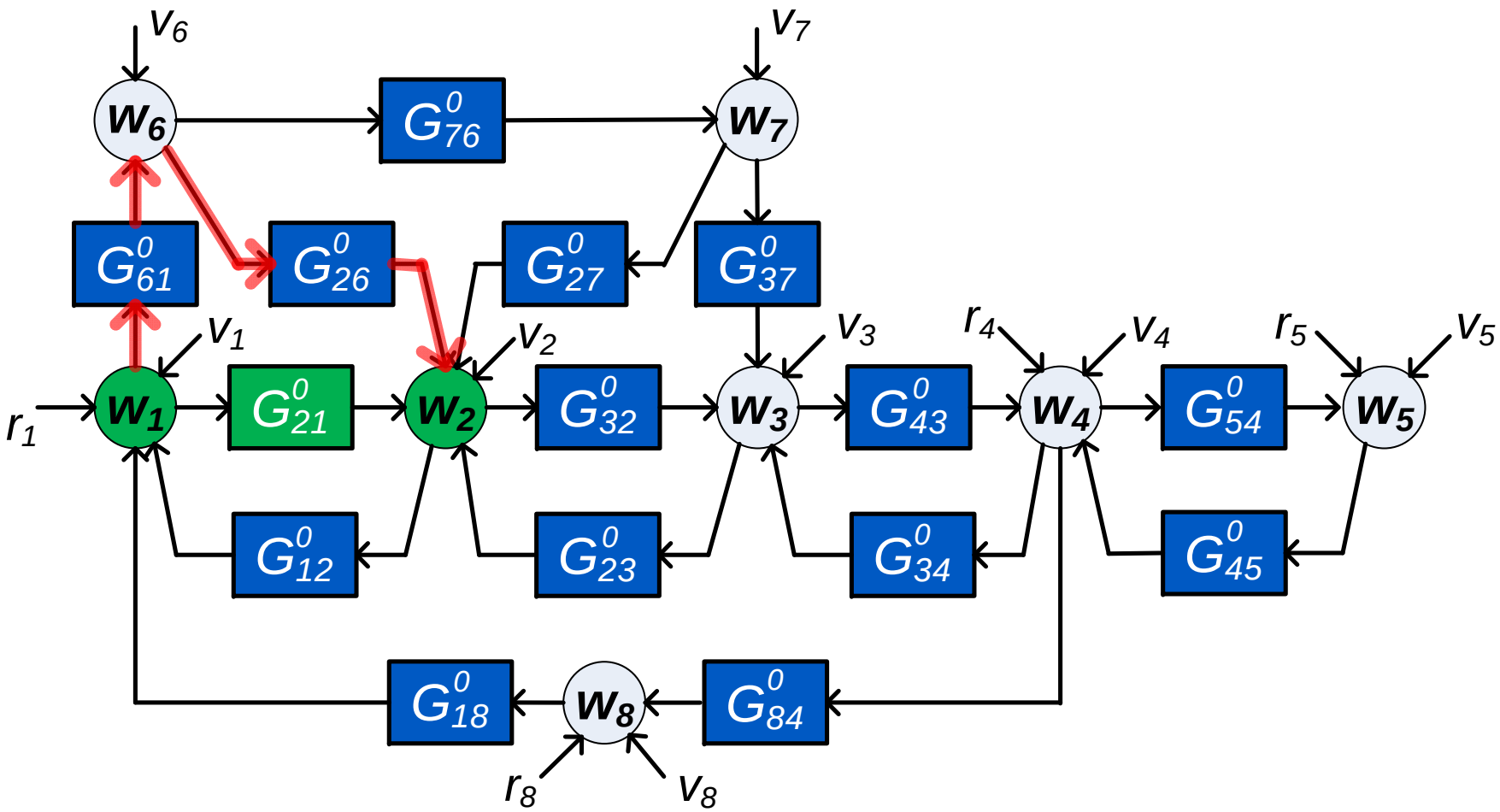

The single module identification problem

parallel paths, and loops around the output

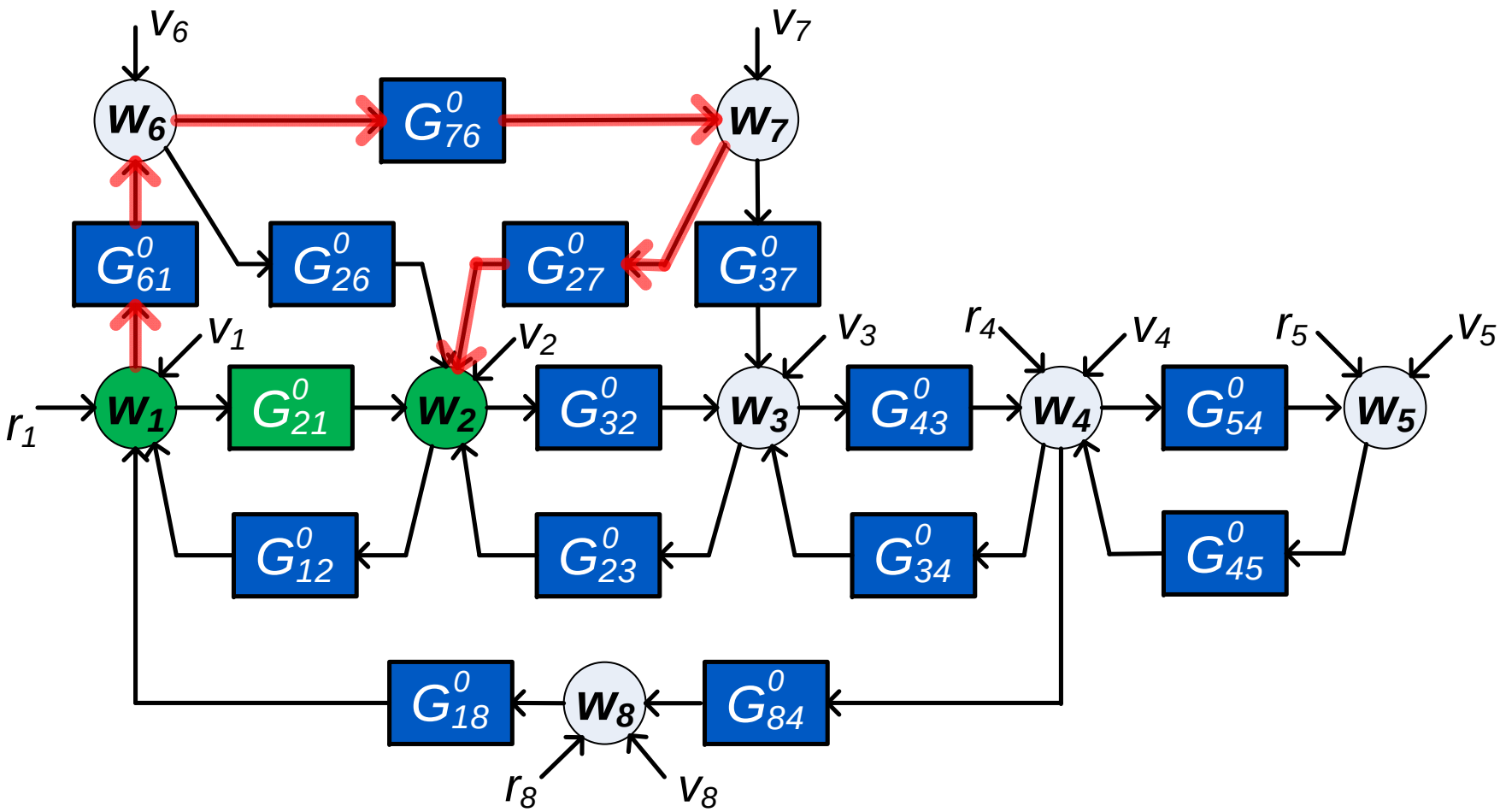

The single module identification problem

parallel paths, and loops around the output

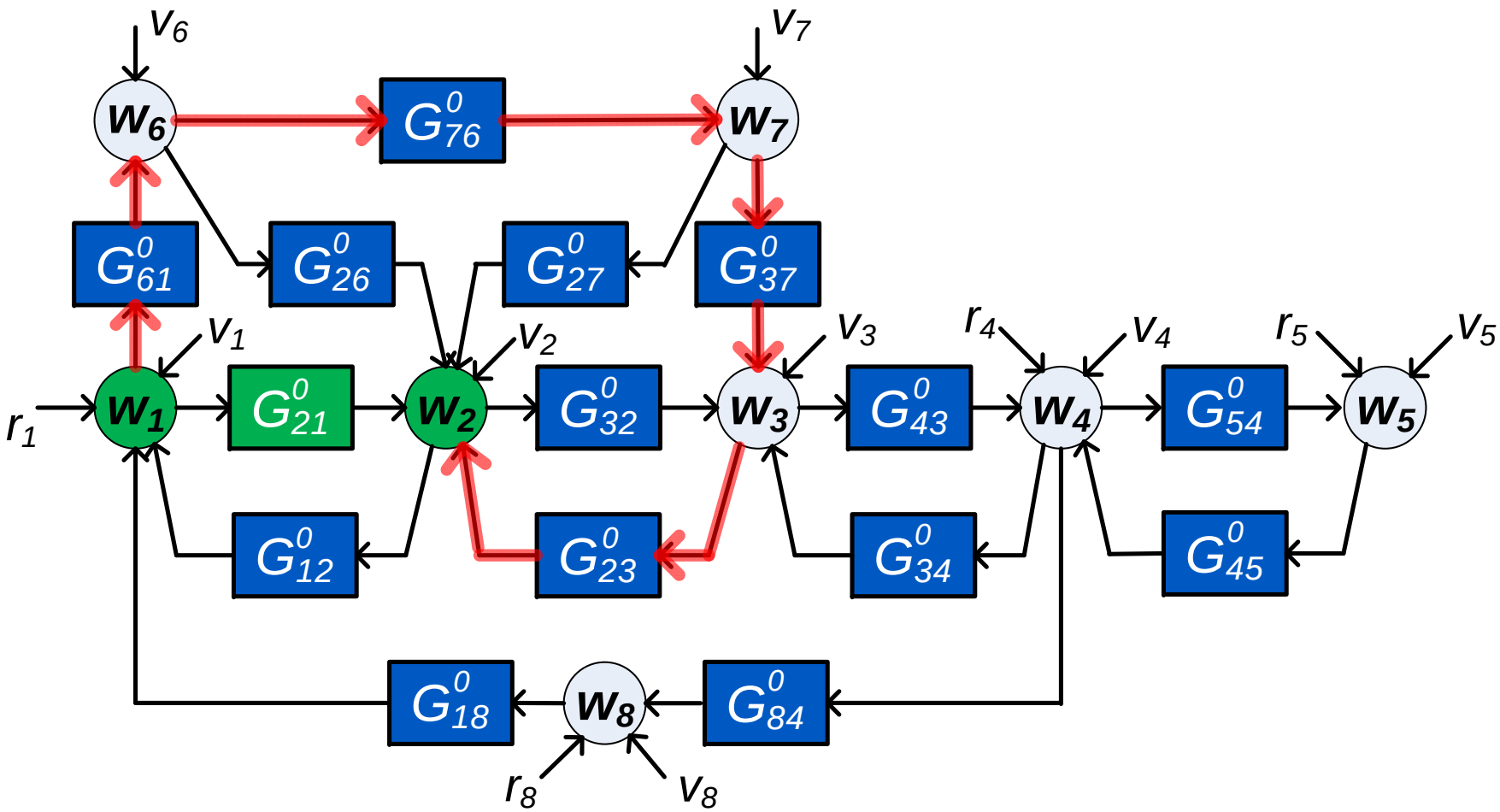

The single module identification problem

Choose w_6 as an additional input

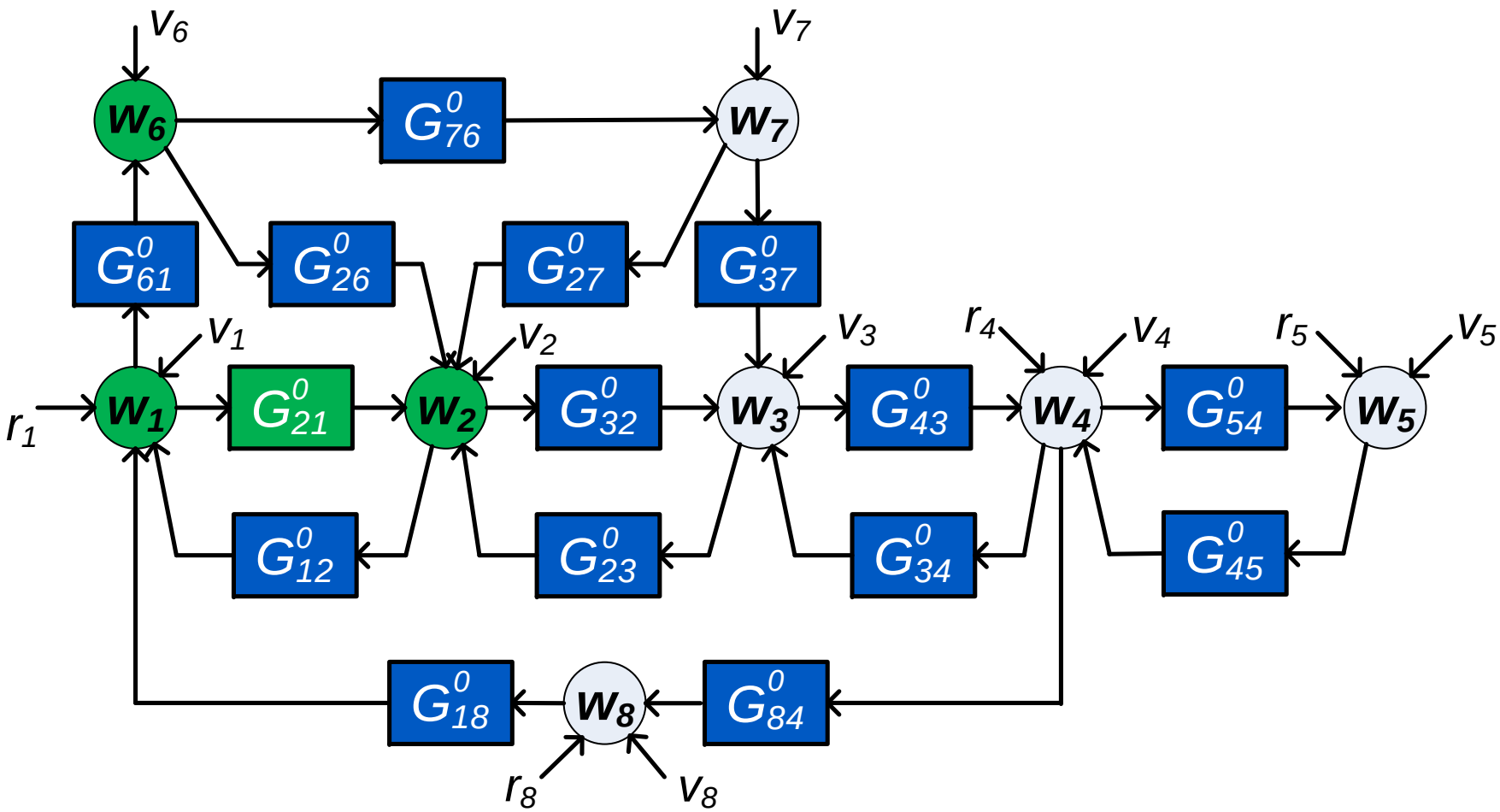

The single module identification problem

parallel paths, and **loops around the output**

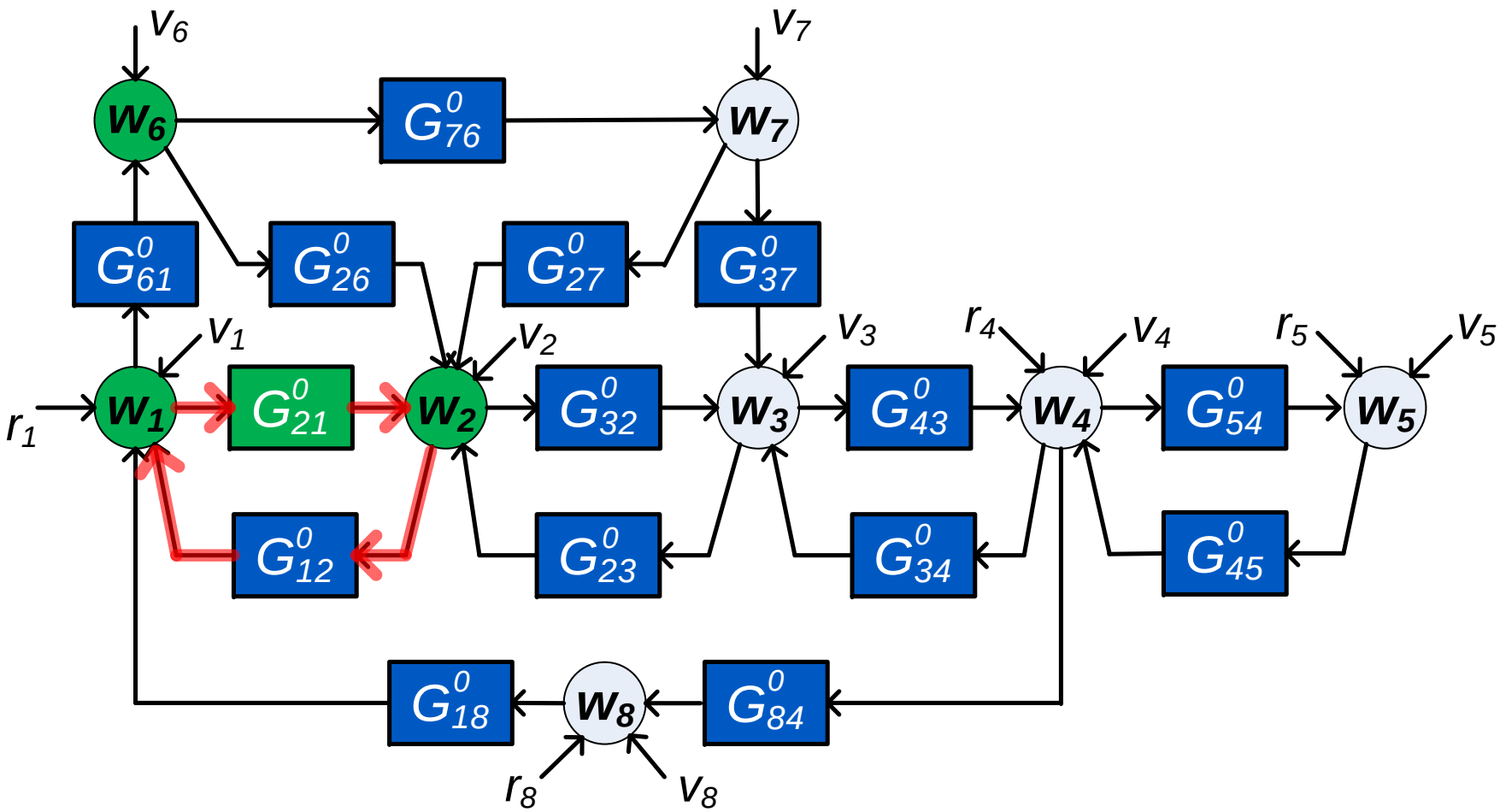

The single module identification problem

parallel paths, and **loops around the output**

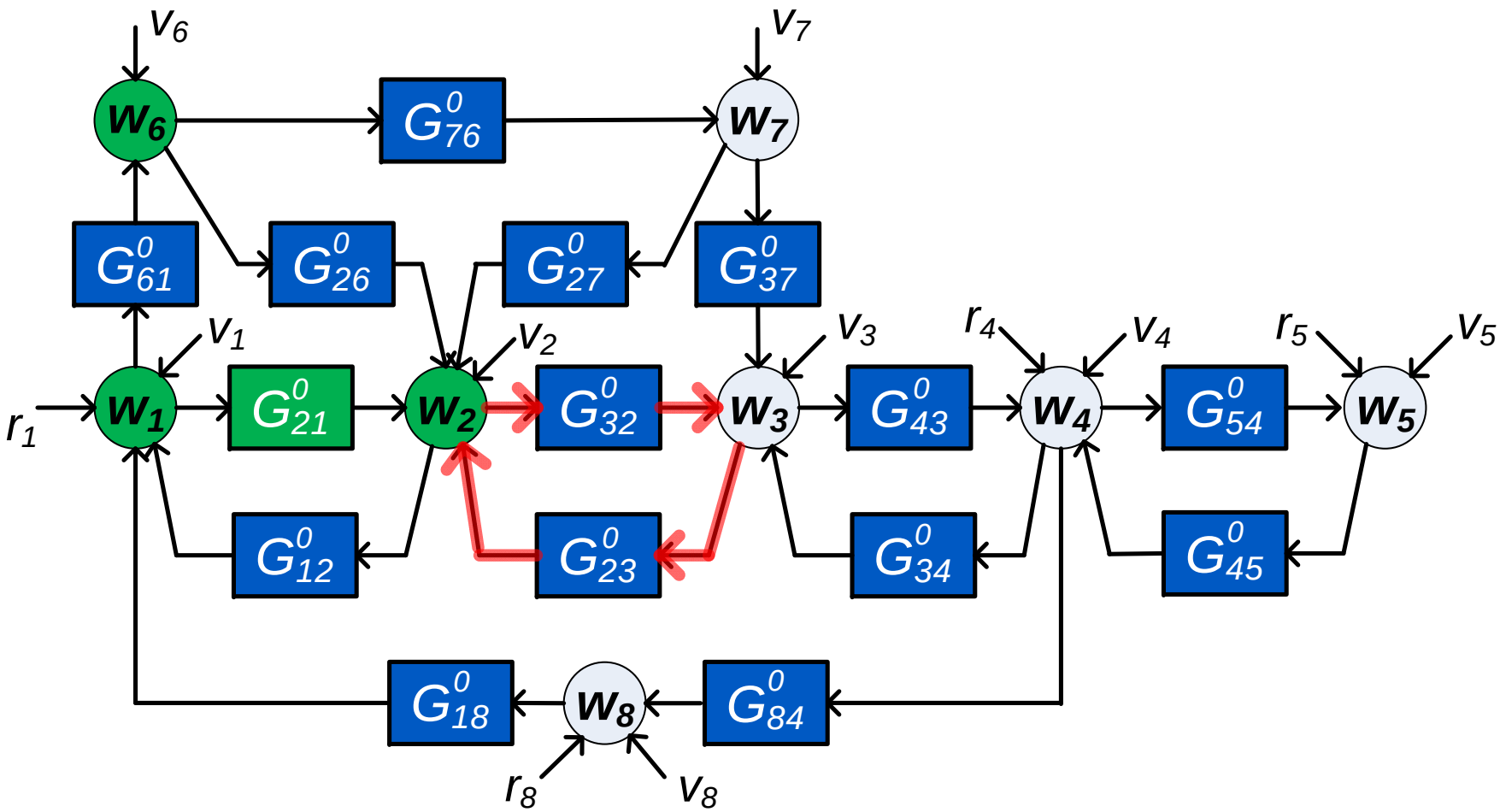

The single module identification problem

Choose w_3 as an additional input

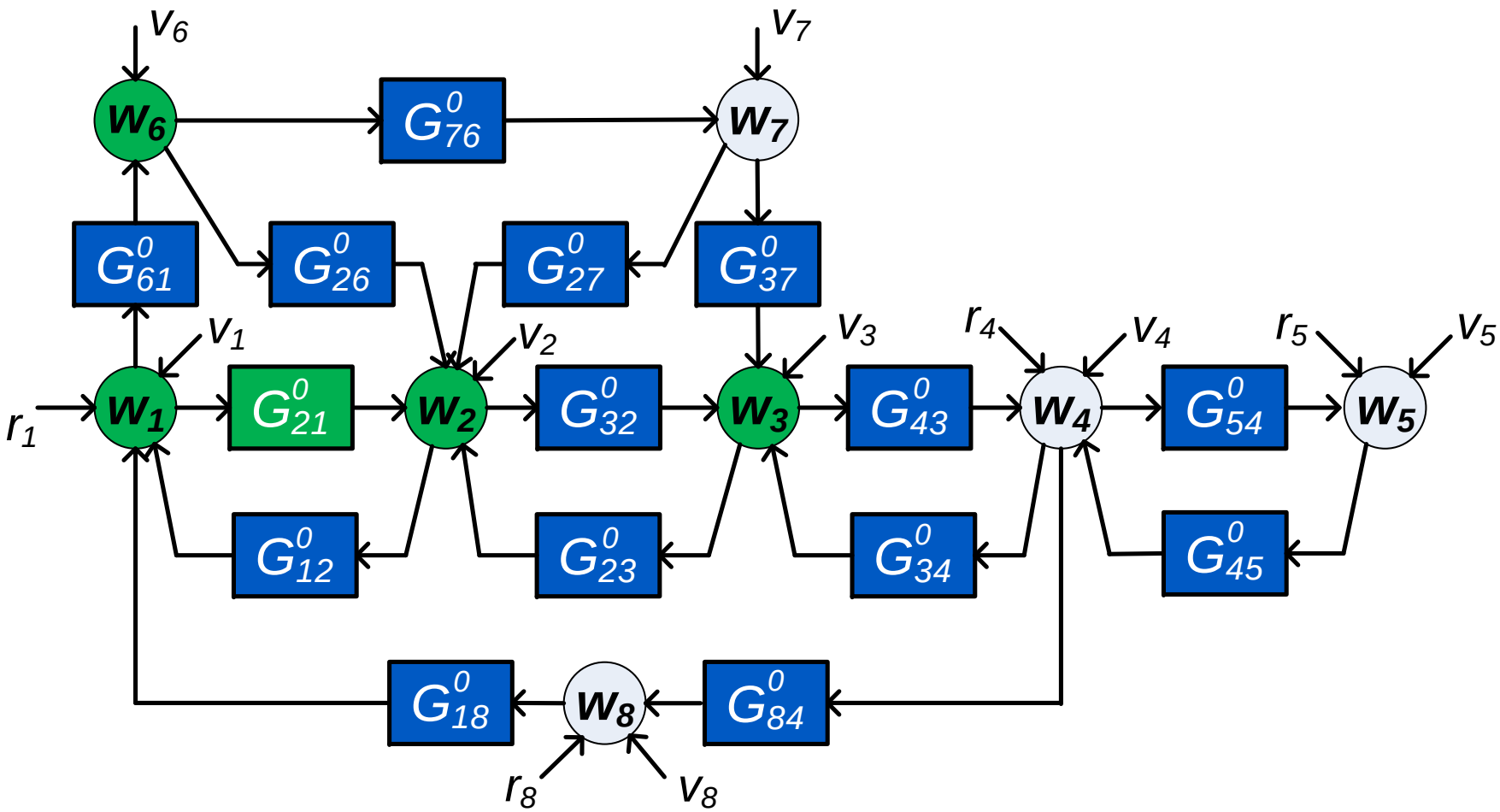

The single module identification problem

Conclusion:
With a 3-input, 1 output model we can consistently identify G_{21}^0

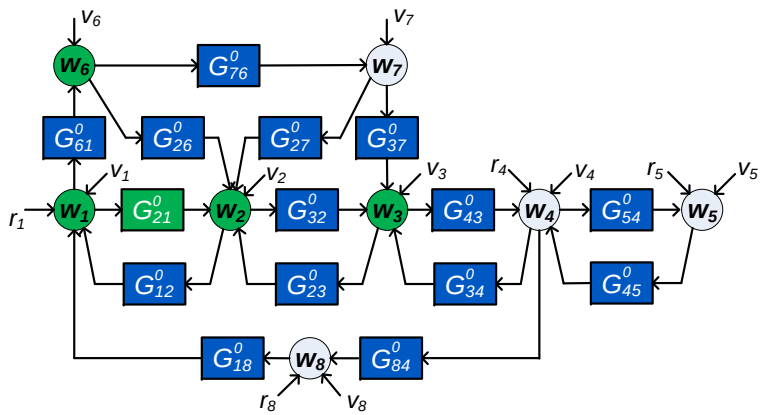

For a minimum variance estimate (direct method) we have to address the presence of: **confounding variables,** [1]
i.e. correlated disturbances on inputs and outputs

The immersion reasoning is *sufficient* but not *necessary* to arrive at a consistent estimate [2]

[1] A.G. Dankers, P.M.J. Van den Hof, D. Materassi and H.H.M. Weerts, *Proc. IFAC World Congress*, 2017.
[2] J. Linder and M. Enqvist. *Int. J. Control*, 90(4), 729-745, 2017.

Contents

Sensor noise – the errors-in-variables problem

Identification of a single module under the influence of sensor noise:

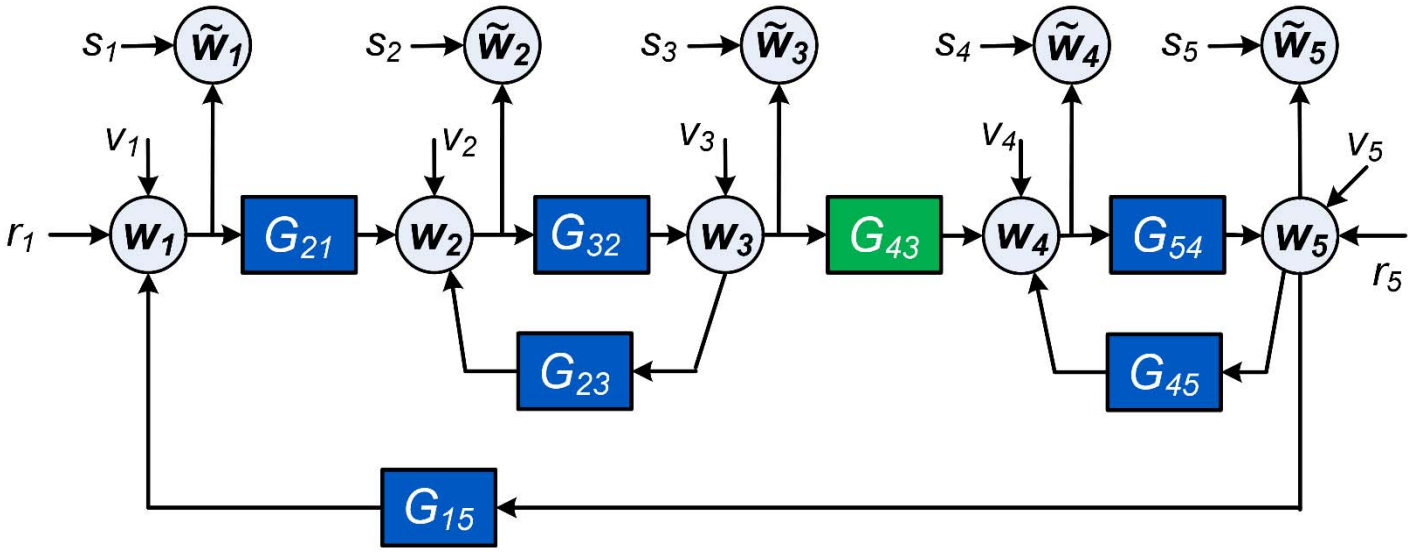

- Typical tough problem in open-loop identification
- In dynamic networks this may become *more simple* due to the presence of multiple (correlated) node signals

Assumption: s_i and r_j mutually uncorrelated

Sensor noise – the errors-in-variables problem

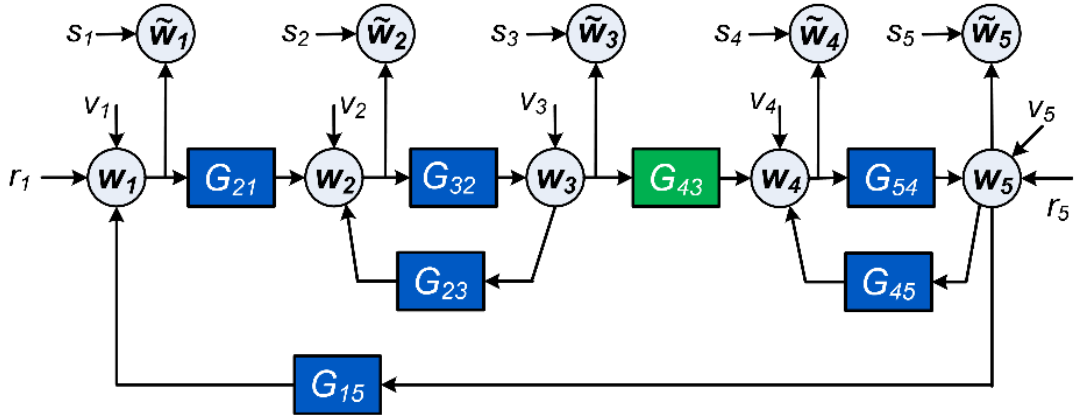

Three solution strategies:

1. Use *external signals* in combination with 2s/projection/IV method

2. Use network instruments in the *Instrumental Variable (IV)* method (not only external signals)

3. *Generalize* the use of *IV* to combine it with noise models, to handle both sensor and process noise.

Sensor noise – the errors-in-variables problem

1. **Use *external signals* in combination with 2s/projection/IV method**

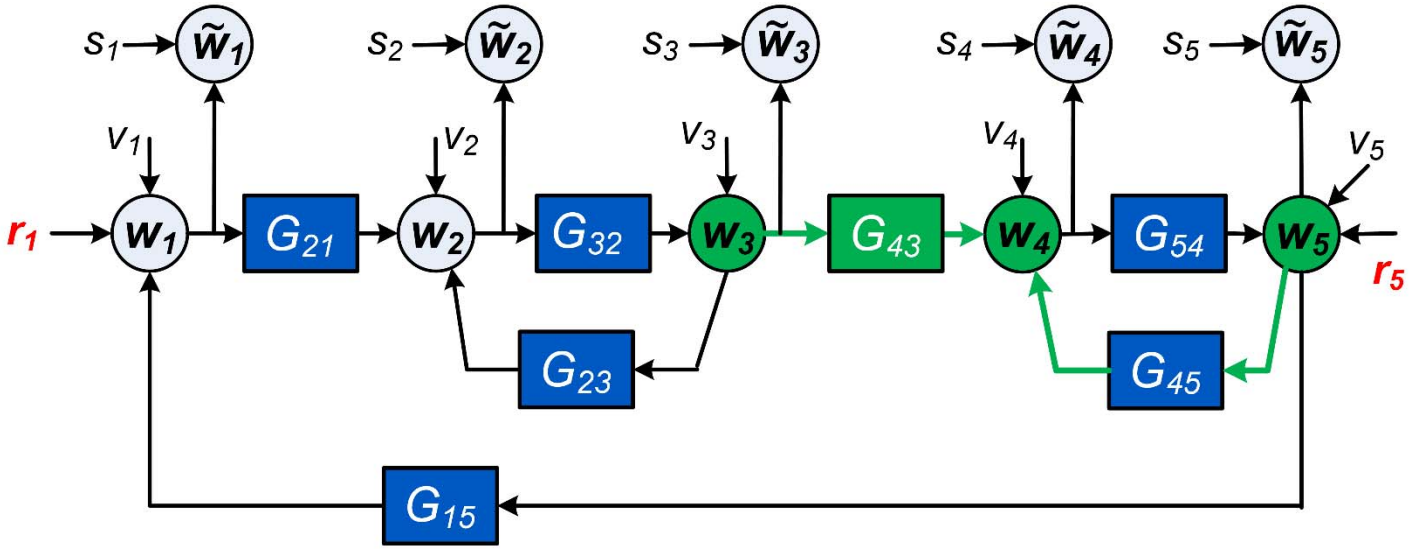

- If measured predictor input signals ($\tilde{w}_3, \tilde{w}_5$) are projected onto r_1, r_5 and then applied in a 2s-PE criterion, the sensor noise on the inputs is effectively removed
- Consistent estimate if sufficient external excitation available

Sensor noise – the errors-in-variables problem

2. Use network instruments in the Instrumental Variables (IV) method

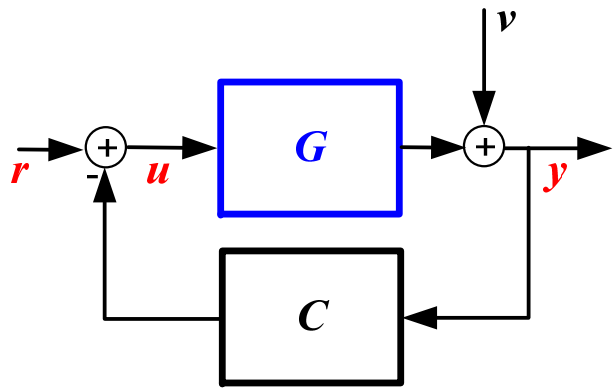

The classical (basic) IV reasoning:

Choose an ARX predictor for *G*:

$$\varepsilon(t,\theta) = B(q^{-1},\theta)u(t) - A(q^{-1},\theta)y(t)$$

with number of parameters $n_a + n_b$.
When choosing *r* as instrumental signal:

$$\theta^* = sol_\theta \; \{\underbrace{\bar{E}\varepsilon(t,\theta)r(t-\tau)}_{R_{\varepsilon r}(\tau,\theta)} = 0\} \quad \tau = 0, \cdots n_a + n_b - 1$$

Sensor noise – the errors-in-variables problem

2. Use network instruments in the Instrumental Variables (IV) method

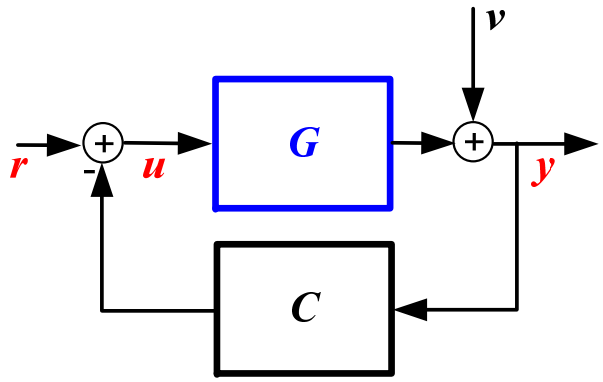

The equivalence relation

$$\{R_{\varepsilon r}(\tau, \theta^*) = 0,\ \tau = 0, \cdots n_a + n_b - 1\} \Leftrightarrow \{G(q, \theta^*) = G_0\}$$

holds if the following conditions are satisfied:

- The data is informative
- Process noise v is uncorrelated to r
- Plant model is correctly parametrized

- T. Söderström and P. Stoica (1983)

Sensor noise – the errors-in-variables problem

2. Use network instruments in the Instrumental Variables (IV) method

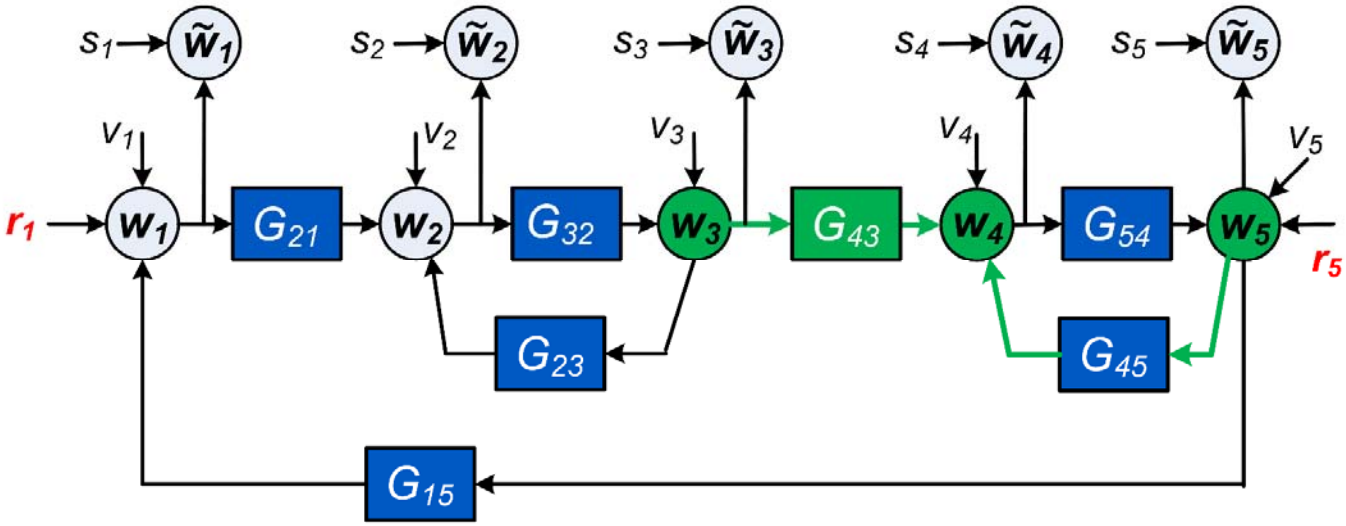

All node signals that not act as predictor input can be chosen as IV:

$$z(t) = [r_{k_1} \cdots r_{k_n} \ \tilde{w}_{\ell_1} \cdots \tilde{w}_{\ell_m}]^T$$

Estimator: $\theta^* = sol_\theta \ \{R_{\varepsilon z}(\tau, \theta) = 0\} \quad \tau = 0, \cdots n_z$

Maintain a (MISO) ARX model structure

Sensor noise – the errors-in-variables problem

2. Use network instruments in the Instrumental Variables (IV) method

- Select module G^0_{ji} as module of interest.
- Select output $\tilde{w}_j$ and predictor inputs $\tilde{w}_k, k \in \mathcal{D}_j$ such that $G^0_{jk} \neq 0$
- All remaining measured signals can act as instruments

The equivalence relation

$$\{R_{\epsilon z}(\tau, \theta^*) = 0,\ \tau = 0, \cdots n_z\} \Leftrightarrow \{G_{jk}(q, \theta^*) = G^0_{jk},\ \forall k \in \mathcal{D}_j\}$$

holds for a finite value of n_z if the following conditions are satisfied:

- There is no path from w_j to any of the instruments
- v_j is uncorrelated to all v_m with paths to an instrument
- Plant model correctly parametrized, and data is informative

• A.G. Dankers, P.M.J. Van den Hof, X. Bombois and P.S.C. Heuberger, *Automatica, 62,* 39-50, 2015.

Sensor noise – the errors-in-variables problem

Restrictive condition:

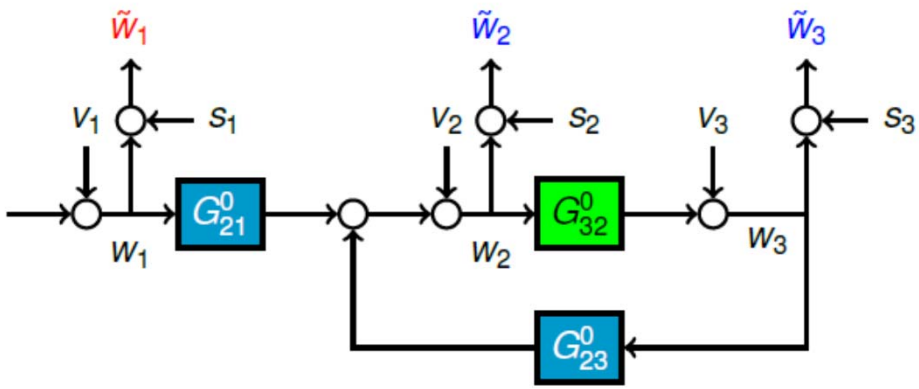

Objective: identify G_{32}^0.
Choose $\tilde{w}_2$ and $\tilde{w}_3$ as predictor inputs

$\tilde{w}_1$ can be used as instrumental variable

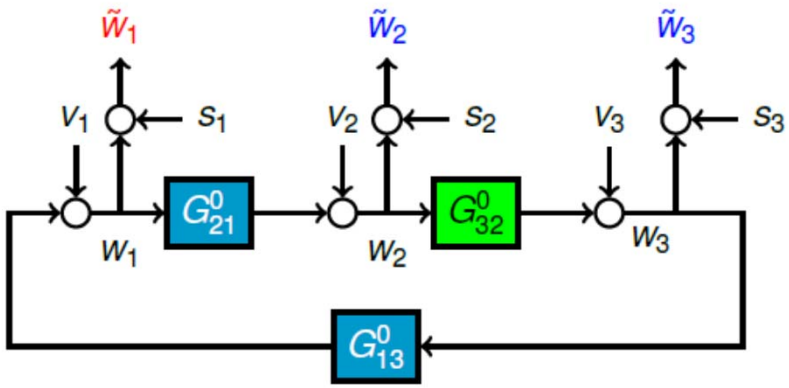

$\tilde{w}_1$ can **not** be used as instrumental variable

Sensor noise – the errors-in-variables problem

2. Use network instruments in the Instrumental Variables (IV) method

- IV estimator can be calculated by simple **linear regression**

Further generalization to combine IV and PE/Box Jenkins to

- Remove the constraint on the selection of instruments
- Include modelling of process noise (reduce variance)
- At the cost of non-convex optimization

Sensor noise – the errors-in-variables problem

3. Generalize IV to combine with direct PE method

The restrictive condition on choice of instruments is there to avoid correlation between output disturbance and inputs/instruments

But: the direct method of PE identification (in closed-loop) is able to handle this,
at the ”cost” of including an accurate noise model

So: we switch from ARX to a Box-Jenkins model structure:

$$G_{jk}(q,\theta) = \frac{B_{jk}(q,\theta)}{F_{jk}(q,\theta)} \qquad k \in \mathcal{D}_j$$

$$H_j(q,\theta) = \frac{C_j(q,\theta)}{D_j(q,\theta)}$$

Sensor noise – the errors-in-variables problem

3. Generalize IV to combine with direct PE method

The equivalence relation

$$\{R_{\varepsilon z}(\tau,\theta^*) = 0,\ \tau = 0,\cdots n_z\} \Leftrightarrow \left\{ \begin{array}{c} G_{jk}(q,\theta^*) = G^0_{jk},\ \forall k \in \mathcal{D}_j \\ H_j(q,\theta^*) = H^0_j \end{array} \right\}$$

holds for a finite value of n_z if the following conditions are satisfied:

- ~~There is no path from w_j to any of the instruments~~
- v_j is uncorrelated to all v_m with paths to an instrument or to w_j
- Plant and noise model correctly parametrized, and data is informative

No more condition on the allowable set of instruments

Sensor noise – the errors-in-variables problem

3. Generalize IV to combine with direct PE method

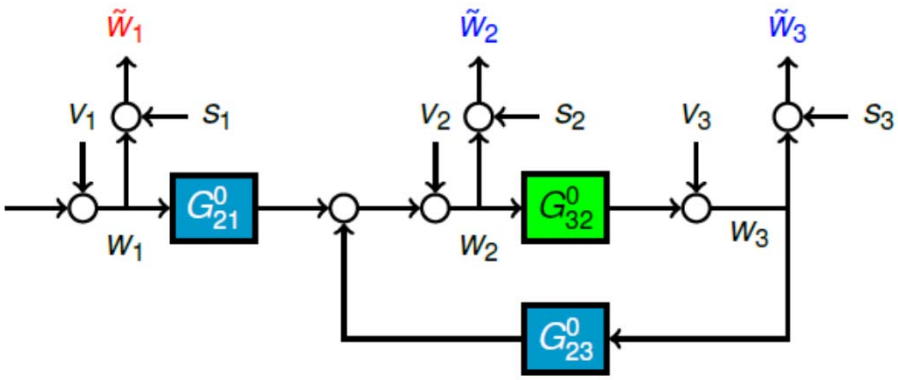

Objective: identify G_{32}^0.
Choose $\tilde{w}_2$ and $\tilde{w}_3$ as predictor inputs

$\tilde{w}_1$ can be used as instrumental variable

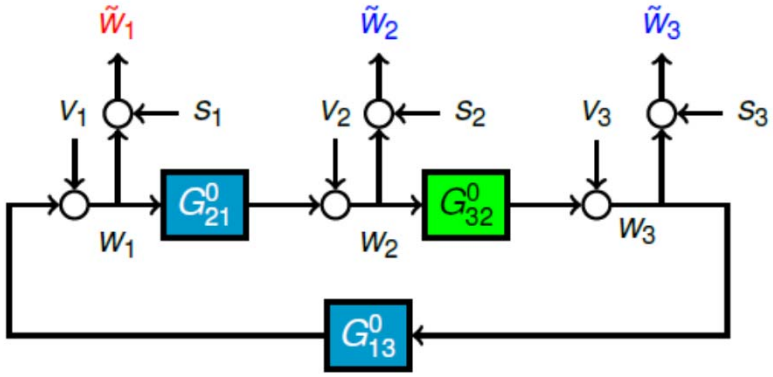

$\tilde{w}_1$ **can** be used as instrumental variable

Sensor noise – the errors-in-variables problem

3. Generalize IV to combine with direct PE method

Algorithm:

Because of BJ model structure:

$$\mathbf{sol}_\theta \; R_{\varepsilon z}(\tau, \theta) = 0, \;\; \tau = 0, \cdots n_z$$

cannot be solved analytically.

Equivalent formulation: $$\min_\theta \sum_{\tau=0}^{n_z} R_{\varepsilon z}(\tau, \theta) R_{\varepsilon z}^T(\tau, \theta)$$

Quadratic cost function of elements of the cross-correlation.

Sensor noise – the errors-in-variables problem

3. Generalize IV to combine with direct PE method

$$R_{\epsilon z}(\tau) = \bar{\mathbb{E}}\Big[\Big(H_j^{-1}(\theta)\Big(\tilde{w}_j(t) - \sum_{k\in\mathcal{D}_j} G_{jk}(\theta)\tilde{w}_k(t)\Big)\Big)z^T(t-\tau)\Big]$$

$$\underbrace{R_{\epsilon z}(\tau)}_{\text{residual}} = H_j^{-1}(q,\theta)\Big(\underbrace{R_{\tilde{w}_j z}(\tau)}_{\text{“output”}} - \sum_{k\in\mathcal{D}_j} G_{jk}(q,\theta)\underbrace{R_{\tilde{w}_k z}(\tau)}_{\text{“inputs”}}\Big)$$

This is the formulation of an PE/BJ identification problem,
with vector output: $R_{\tilde{w}_j z}(\tau)$
and vector inputs: $R_{\tilde{w}_k z}(\tau),\ k \in \mathcal{D}_j$

Sensor noise – the errors-in-variables problem

3. Generalize IV to combine with direct PE method

$$R_{\epsilon z}(\tau) = \bar{\mathbb{E}}\Big[\Big(H_j^{-1}(\theta)\Big(\tilde{w}_j(t) - \sum_{k\in\mathcal{D}_j} G_{jk}(\theta)\tilde{w}_k(t)\Big)\Big)z^T(t-\tau)\Big]$$

$$\underbrace{R_{\epsilon z}(\tau)}_{\text{residual}} = H_j^{-1}(q,\theta)\Big(\underbrace{R_{\tilde{w}_j z}(\tau)}_{\text{“output”}} - \sum_{k\in\mathcal{D}_j} G_{jk}(q,\theta)\underbrace{R_{\tilde{w}_k z}(\tau)}_{\text{“inputs”}}\Big)$$

Two phenomena to be distinguished in this procedure:

a) Taking cross-correlation functions deals with the sensor noise

b) Noise modelling and quadratic cost function minimization, deals with (correlated) process noise

Sensor noise – the errors-in-variables problem

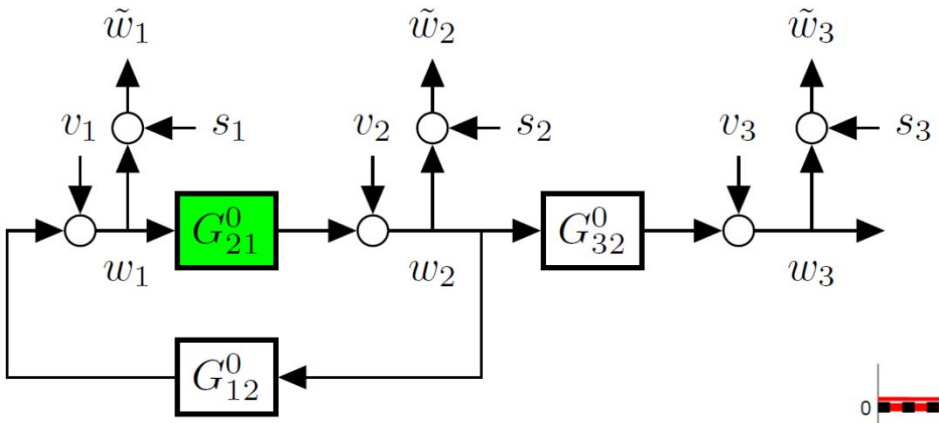

$\tilde{w}_3$ is chosen as instrument while there is a path from w_2 to $\tilde{w}_3$.

Blue: Direct Closed Loop Method
(bias due to sensor noise)

Red: Generalized IV Method with BJ model structure
(no bias)

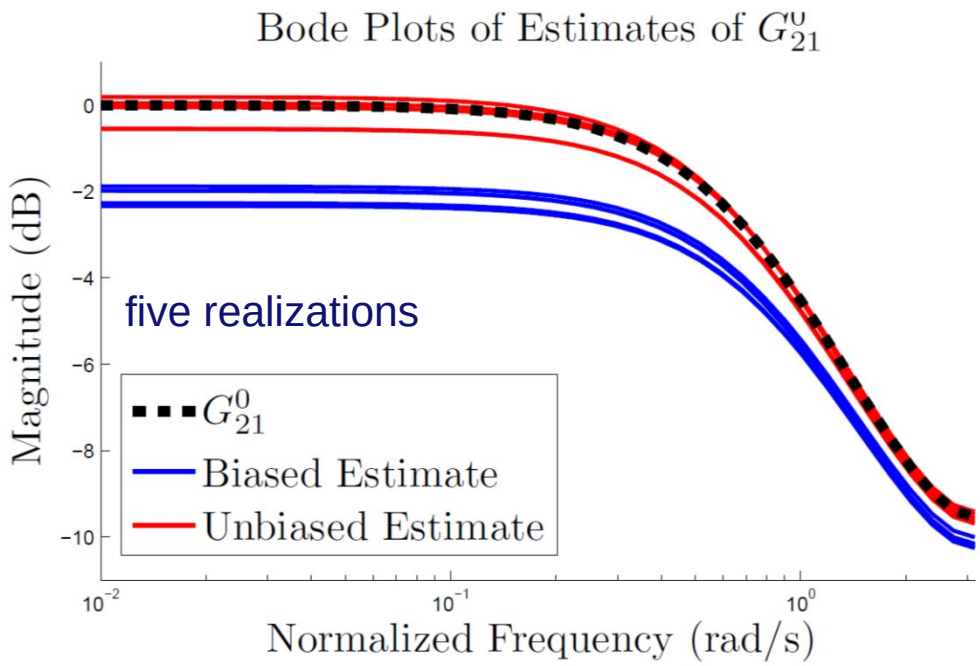

$n_z = 1000; \; N = 5000$

Conclusions - EIV

- **Consistent** module estimation is feasible for sensor-noise disturbed measurements (EIV-problem)
- An **IV approach** is attractive for dealing with sensor noise
- Handling of sensor noise is facilitated by **more optional instrument signals** in dynamic network (compared to open-loop / closed-loop systems)
- Conditioned on the type of instrument signals that are available:
  - The problem can be solved by a **linear regression** algorithm, or
  - A **non-convex optimization** of a quadratic cost-function based on **cross-correlation data**

Further reading: A.G. Dankers, P.M.J. Van den Hof et al.; *Automatica*, 62 (2015), 39-50.

Contents

- **Introduction and dynamic networks**
- **The local / single module identification problem:**
  which signals to measure?
- **Sensor noise – the errors-in-variables problem**
- **Network identifiability**
- **Reduced-rank noise**
- **Conclusions**

Network identifiability

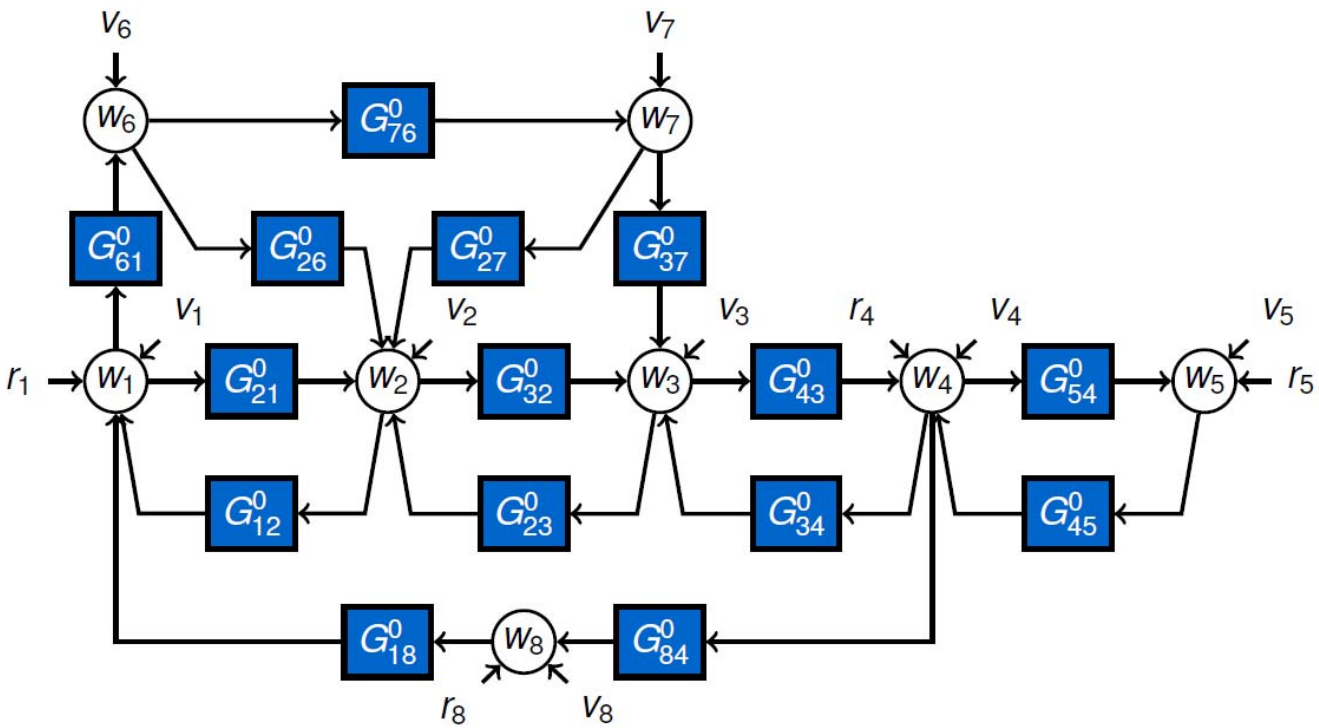

Question: Can the dynamics/topology of a network be *uniquely determined* from measured signals w_i , r_i ?

Question: Can different dynamic networks be *distinguished* from each other from measured signals w_i , r_i ?

Introduction: identifiability

There are two different bijective mappings involved:

Objects uniquely identified from data

$$\overbrace{(W_y(q,\theta), W_u(q,\theta))} \Longleftrightarrow (G(q,\theta), H(q,\theta)) \Longleftrightarrow \theta$$

Classically: **trivial** **identifiability**

Network situation: **Nontrivial**

Reason:

- Freedom in network structure
- Freedom in presence of excitation and disturbances

Network identifiability

Conditions for **network identifiability** of a model set are based on:

- Presence and location of exernal excitation signals
- Presence and location of process noise
- Parametrization of network dynamics (prior knowledge) in both module dynamics and noise dynamics

Further reading: H.H.M. Weerts, P.M.J. Van den Hof and A.G. Dankers, ArXiv 2016; *Automatica*, 2018.

Contents

Reduced-rank noise

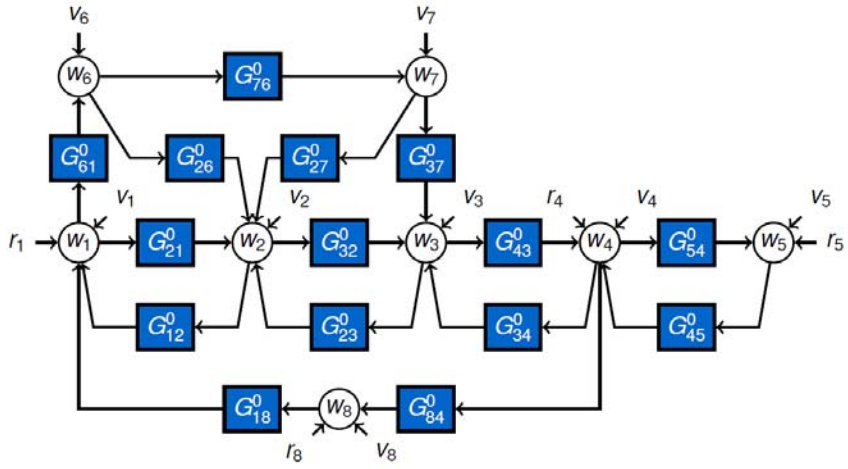

r_i external excitation
v_i process noise
w_i node signal

$$\begin{bmatrix} v_1(t) \\ \vdots \\ v_L(t) \end{bmatrix} = H^0(q) \begin{bmatrix} e_1(t) \\ \vdots \\ e_p(t) \end{bmatrix}$$

Main question:
How to identify (parts of) a dynamic network, when the process noise is of reduced rank *(p < L)*?

Typical: multi-output situation

Reduced-rank noise

Weighted LS criterion:

$$\hat{\theta}_N^{WLS} = \arg\min_{\theta\in\Theta} \frac{1}{N}\sum_{t=1}^{N} \varepsilon^T(t,\theta)\; Q\; \varepsilon(t,\theta) \qquad Q > 0$$

Properties:

- Consistent estimate under regularity conditions,
- But for minimum variance an optimal Q has to be chosen

Typical choice, leading to minimum variance estimator:

$$Q = [cov(\check{e})]^{-1} = (\check{\Lambda}^0)^{-1}$$

but in our situation $\check{\Lambda}^0$ is singular

Reduced-rank noise

The WLS estimator does not take account of the dependencies in the innovation:

$$\begin{bmatrix}\Gamma^0 & -I\end{bmatrix}\check{e}(t) = 0$$

or differently formulated:

$$\begin{bmatrix}\Gamma^0 & -I\end{bmatrix}\begin{bmatrix}\varepsilon_a(t,\theta_0)\\ \varepsilon_b(t,\theta_0)\end{bmatrix} = 0$$

This can be imposed, by restricting the parametrized model to satisfy:

$$\underbrace{\Gamma(\theta)\varepsilon_a(t,\theta) - \varepsilon_b(t,\theta)}_{:= Z(t,\theta)} = 0$$

We denote:

Constrained LS and Maximum Likelihood

Solution: Parametrize dependencies in innovation process, and include them as constraints:

Constrained LS criterion:

$$\hat{\theta}_N^{CLS} = \arg\min_{\theta\in\Theta} \frac{1}{N}\sum_{t=1}^{N} \varepsilon_a^T(t,\theta)\; Q_a\; \varepsilon_a(t,\theta) \qquad Q_a > 0$$

$$\text{subject to } \frac{1}{N}\sum_{t=1}^{N} Z^T(t,\theta) Z(t,\theta) = 0$$

Properties:

- Consistent estimate under similar conditions as WLS
- The choice $Q_a = (\Lambda^0)^{-1}$

  leads to minimum variance, and ML properties in case of Gaussian noise.

Further reading: H.H.M. Weerts, P.M.J. Van den Hof and A.G. Dankers, *IFAC World Congress*, 2017

Conclusions

- **Dynamic network identification:**
  intriguing research topic with many open questions
- Including topology identification
- The linear, time-invariant framework is only just the beginning

European Research Council

Further reading

- P.M.J. Van den Hof, A. Dankers, P. Heuberger and X. Bombois (2013). Identification of dynamic models in complex networks with prediction error methods - basic methods for consistent module estimates. *Automatica,* Vol. 49, no. 10, pp. 2994-3006.

- A. Dankers, P.M.J. Van den Hof, X. Bombois and P.S.C. Heuberger (2015). Errors-in-variables identification in dynamic networks - consistency results for an instrumental variable approach. *Automatica*, Vol. 62, pp. 39-50, December 2015.

- A. Dankers, P.M.J. Van den Hof, P.S.C. Heuberger and X. Bombois (2016). Identification of dynamic models in complex networks with predictior error methods - predictor input selection. *IEEE Trans. Automatic Control*, *61 (4)*, pp. 937-952, April 2016.

- P.M.J. Van den Hof, A.G. Dankers and H.H.M. Weerts (2017). System identification in dynamic networks. *Computers & Chemical Engineering*, to appear, 2017. ArXiv: 1710.08865.

- H.H.M. Weerts, P.M.J. Van den Hof and A.G. Dankers (2018). Identifiability of linear dynamic networks. *Automatica*, 2018, to appear. ArXiv: 1711.06369, 2017.

- H.H.M. Weerts, P.M.J. Van den Hof and A.G. Dankers (2017). Prediction error identification of linear dynamic networks with rank-reduced noise. Submitted for publication. ArXiv: 1711.06369.

Papers available at www.publications.pvandenhof.nl