IV methods for closed-loop system identification

Marion Gilson - **Paul Van den Hof**

Centre de Recherche en Automatique de Nancy

Delft Center for Systems and Control

SYSID - Rotterdam, Netherlands - 27 / 08 / 2003

Contents

Contents

I. Closed-loop system identification

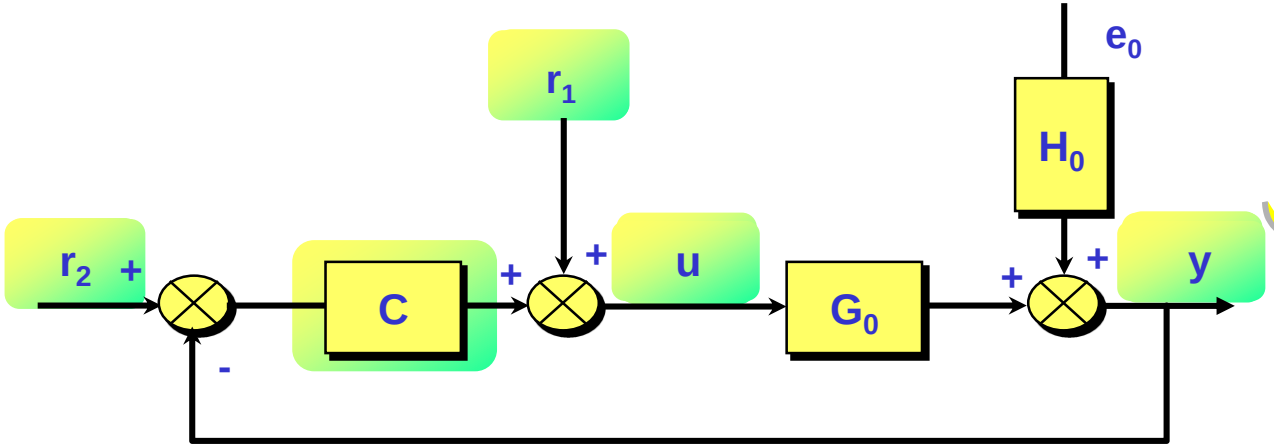

Problem:

correlation between u and the noise

Solutions

- **Direct approaches:** (y, u)
  - direct identification of the process from the measured data u and y
- **Indirect approaches:** (y, u, r, C) (excitation signal noted: $r = r_1 + Cr_2$)
  - identification of the CL transfer
  - deduction of the process model using the knowledge of C
- **Joint input/output approaches:** (y, u, r)
  - joint identification of the different transfers (y/r and u/r)
  - deduction of the process model (two-stage method, coprime method e.g.)

I. Closed-loop system identification

➢ Goals of the study

- To find methods to consistently identify plant models of CL systems
- To use simple linear regression algorithms

➢ Solutions

- To propose IV methods dedicated to the CL identification problem
- To answer the question: how to achieve the smallest variance of the estimate (and the consequence for the optimal choice of the design parameters: weights, filters, and instruments)?

Contents

II. Extended IV methods

System to be identified

$$S \quad \begin{cases} y(t) = G_0(q)u(t) + H_0(q)e_0(t) \\ u(t) = r(t) - C(q)y(t) \end{cases}$$

with G: $G_0(q) = \dfrac{B_0(q)}{A_0(q)}$ of order n_0

controller C of order m, $e_0(t)$ white noise with variance $\{\lambda_0\}$

ARX model set

$$M : y(t) = \psi^T(t)\,\theta + \varepsilon(t)$$

Extended IV (T. Söderström, P. Stoica)

$$\hat{\theta}_{xiv} = \arg\min_{\theta} \left\| \frac{1}{N}\sum_{t=1}^{N} z(t)L(q^{-1})\left[y(t) - \psi^T(t)\,\theta\right] \right\|_Q^2$$

- $z(t)$ = instruments such as $\begin{cases} \bar{\mathbf{E}}\, z(t)\,\psi^T(t) \text{ non singular} \\ 0 = \bar{\mathbf{E}}\, z(t)\, e_0(t) \end{cases}$
- $L(q^{-1})$ = stable pre-filter
- $\|x\|_Q^2 = x^T Q\, x$ with Q a positive definite weighting matrix

II. Extended IV methods

Proposition : a closed-loop dedicated solution (clxiv)

- **Notations**
  - delayed extra-signal $\varphi_r(t) = \left[r(t-1) \;\; \cdots \;\; r(t-n-m)\right]^T$
  - OL regressor $\psi(t) = \left[y(t-1) \;\; \cdots \;\; y(t-n) \;\; u(t-1) \;\; \cdots \;\; u(t-n)\right]^T$
  - CL regressor $\varphi(t) = \left[y(t-1) \;\; \cdots \;\; y(t-n-m) \;\; r(t-1) \;\; \cdots \;\; r(t-n-m)\right]^T$

- **Tailor-made IV method** (M. Gilson, P. Van den Hof 2001) or BELS method
  - Goal: to estimate and to eliminate the bias induced by a LS estimation

- **Equivalent to an extented IV method with design parameters:**
  - instruments $z(t) = \varphi_r(t)$
  - pre-filter $L(q^{-1}) =$ controller denominator
  - weighting matrix $Q = \left(\hat{R}_{\varphi_r\varphi}\hat{R}^T_{\varphi_r\varphi}\right)^{-1}$ with $\hat{R}_{\varphi_r\varphi} = \frac{1}{N}\sum_{t=1}^{N}\varphi_r(t)\,\varphi(t)$
  - regressor $\psi(\tau)$

II. Extended IV methods

Proposition : a closed-loop dedicated solution (clxiv)

- **Covariance property** $\left(G_0 \in \mathcal{G}\right)$
  - $\hat{\theta}$ asymptotically Gaussian distributed

$$\sqrt{N}\left(\hat{\theta} - \theta\right) / \lambda \xrightarrow{\text{dist}} \mathcal{N}\left(0, P_{xiv}\right)$$

  - with $P_{xiv} = \lambda_0 \left(R^T_{\varphi_r \overline{\psi}} \, Q \, R_{\varphi_r \overline{\psi}}\right)^{-1} R^T_{\varphi_r \overline{\psi}} \, Q \, R_{z_T z_T} \, Q \, R^T_{\varphi_r \overline{\psi}} \left(R^T_{\varphi_r \overline{\psi}} \, Q \, R_{\varphi_r \overline{\psi}}\right)^T$
  - where
    - ➔ $R_{\varphi_r \overline{\psi}} = \overline{\mathbf{E}} \varphi_r(t) L(q^{-1}) \psi^T(t)$
    - ➔ $z_T(t) = \sum_{i=0}^{\infty} t_i \, \varphi_r(t - i)$
    - ➔ $T(q^{-1}) = L(q^{-1}) \, A_0(q^{-1}) \, H_0(q^{-1}) = \sum_{i=0}^{\infty} t_i \, q^{-i}$ (monic filter)

II. Extended IV methods

\+ XIV = asymptotically unbiased results

— Problem of the design parameter selection ($z(t)$, n_z, Q, $L(q^{-1})$)

↓

considerable effects on the estimates and on P_{xiv}

↓

Question : how to achieve the lowest value of P_{xiv}?

Contents

III. Optimal CL IV method

- **Lower bound of P_{xiv} for any unbiased identification method (L. Ljung): Cramer-Rao bound**

closed-loop case

$$P_{xiv}^{opt} = \lambda_0 \left[\overline{\mathbf{E}}\, \breve{\psi}(t)\, \breve{\psi}^T(t) \right]^{-1}$$

with $$\breve{\psi}^T(t) = \left[\frac{d}{dt} \hat{y}(t \mid \theta) \right]^T \Bigg|_{\theta=\theta_0} = \left[A_0\left(q^{-1}\right) H_0\left(q^{-1}\right) \right]^{-1} \tilde{\psi}(t)$$

noise-free part of $\psi(t)$

- **Deduction : optimal IV estimator**

$$z(t) = \lambda_0^{-1} \left[\left(A_0\left(q^{-1}\right) H_0\left(q^{-1}\right) \right)^{-1} \tilde{\psi}(t) \right]^T$$

$$n_z = 2n$$

$$Q = I$$

$$L\left(q^{-1}\right) = \left[A_0\left(q^{-1}\right) H_0\left(q^{-1}\right) \right]^{-1}$$

- **The true noise model has to be known**
- **Optimal accuracy cannot be achieved in practice!**

Contents

IV. Approximate implementation

- **To achieve optimal IV method, we need:**
  - **A noise model** to construct $L(q^{-1})$ and $z(t)$
  - **A first model of $G_0(q)$** to compute $\tilde{\psi}(t)$

- **Proposed solution:**
  - To estimate first **consistent** (and not necessarily efficient) models of $G_0(q)$ and $H_0(q)$
  - Only **second-order statistical property** effects in the resulting accuracy

3 bootstrap techniques

IV. Approximate implementation

- **Preliminary remark:**

Major difference between open-loop and closed-loop cases

➔ In closed-loop, **output AND input** are correlated with the noise

➔ **Consequences on the construction of the instrument z(t)**

uncorrelated to the noise part of u(t)

correlated to the noise-free part of u(t)

IV. Approximate implementation

1st solution: extension of the IV4 method (L. Ljung) to the closed-loop case (CLIV4)

- **Step 1: LS estimation** of G_0 ⇨ $\hat{G}_1(q)$
- **Step 2:**
  - **Generation of the instrument $z_1(t)$** = estimation of $\tilde{\psi}(t)$

    ➔ $z_1(t)$ composed of $\tilde{y}_1(t) = \dfrac{C(q)\,\hat{G}_1(q)}{1 + C(q)\,\hat{G}_1(q)}\, r(t)$ and $\tilde{u}_1(t) = \dfrac{1}{1 + C(q)\,\hat{G}_1(q)}\, r(t)$
  - **IV estimation of G_0** ⇨ $\hat{G}_2(q)$
- **Step 3: noise model estimation**, AR structure ⇨ $\hat{L}(q^{-1})$
- **Step 4:**
  - **generation of the instrument $z_2(t)$** on the basis of $C(q)$, $\hat{G}_2(q)$ and $r(t)$
  - **IV estimation** using $z_2(t)$, $\hat{L}(q^{-1})$

$\hat{\theta}_{cliv4}$

2nd solution: improvement of the 1st solution by using a more sophisticated noise modeling procedure (armacel) - (CLIV4-armacel)

$\hat{\theta}^{arma}_{cliv4}$

IV. Approximate implementation

3rd solution: (clivh)

- **Step 1:** high order LS estimate of G_0 ⇨ $\hat{G}_1(q)$ and $\hat{H}_1(q)$

- **Step 2:**

  - **Generation of the instrument z(t)** on the basis of $\hat{G}_1(q)$, C(q) and r(t)

    ➔ z(t) = estimation of $\tilde{\psi}(t)$

  - **Computation of the pre-filter**

$$\hat{L}(q^{-1}) = \hat{A}_1(q^{-1})\hat{H}_1(q) = 1 \qquad \text{(arx model)}$$

- **Step 3:** **IV estimation** using z(t) and $\hat{L}(q^{-1})$

$\hat{\theta}_{clivh}$

Contents

V. Example

Process to be identified

$$S \quad \begin{cases} y(t) = G_0(q)u(t) + H_0(q)e_0(t) \\ u(t) = r(t) - C(q)y(t) \end{cases}$$

with $G_0(q) = \dfrac{0.5\,q^{-1}}{1 - 0.8\,q^{-1}}$ $(n = 1)$, $C(q) = \dfrac{0.0012 + 0.0002\,q^{-1} - 0.001\,q^{-2}}{0.5 - 0.9656\,q^{-1} + 0.4656\,q^{-2}}$ $(m = 2)$

$$H_0(q) = \frac{1 - 1.5\,q^{-1} + 1.045\,q^{-2} - 0.3338\,q^{-3}}{1 - 2.35\,q^{-1} + 2.09\,q^{-2} - 0.6675\,q^{-3}}$$

Characteristics

- **r(t) =** deterministic sequence (realization of a random binary signal)
- **e_0(t) =** white noise
- **Monte Carlo simulation** with snr=15 dB
- **Application of 5 methods**

V. Example

Methods

- **clxiv:** closed-loop extended method (= tailor-made IV method)
- **cliv4:** extension of the IV4 method to the closed-loop case
- **cliv4_arma:** improvement of the cliv4 method
- **clivh:** bootstrap method using a high LS technique in the first step
- **cliv:** method proposed by Söderström, Stoica, Trullson (1987):
  - $z(t) = \begin{bmatrix} r(t) & r(t-1) & \cdots & r(t-2n) \end{bmatrix}^T$ (extra-signal)
  - $\psi(t) =$ regressor
- **Benchmark:** generation of L(q) and z(t) using the true noise and process models (for illustration purpose)

V. Example

Results: Bode diagrams of the models identified by the six methods

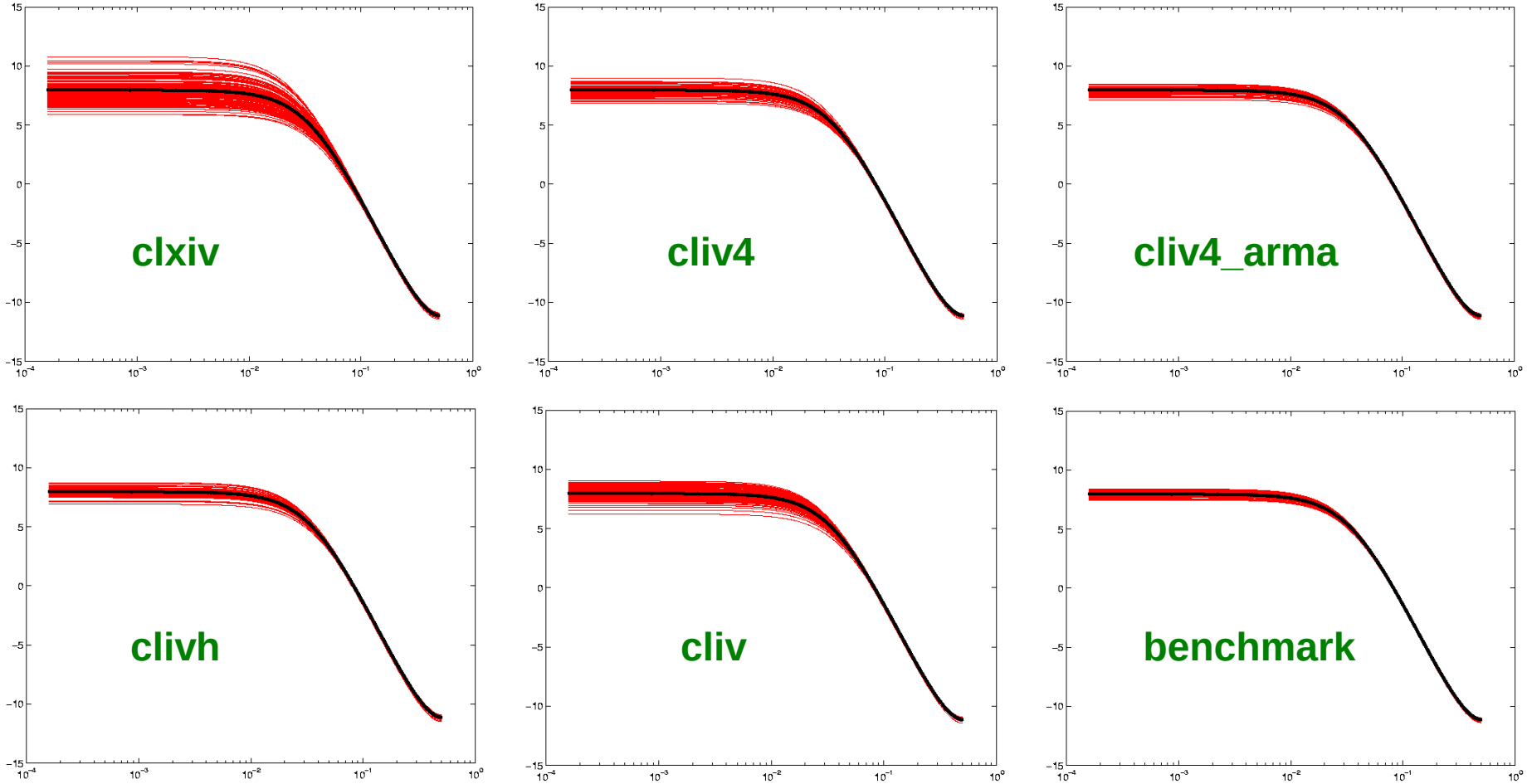

- **Unbiased results**
- **Bootstrap and cliv methods better than clxiv (or tailor-made iv)**

V. Example

Results: representation of the distance between the real and the estimated TF processes

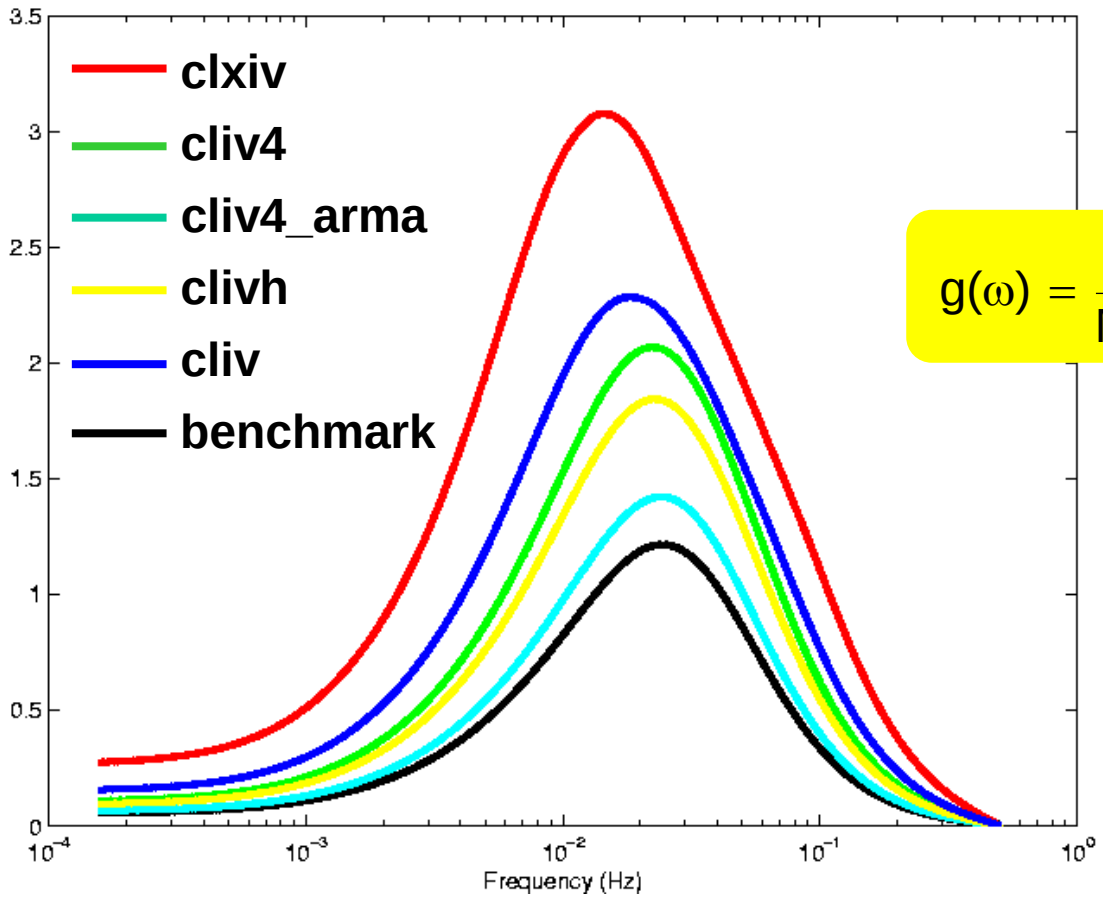

$$g(\omega) = \frac{1}{MC}\sum_{k=1}^{MC}\left|G_0\left(e^{i\omega}\right) - \hat{G}_k\left(e^{i\omega}\right)\right|$$

- **best results obtained with cliv4_arma method**
- **the use of a more sophisticated noise model improves the result**
- **clivh method more appropriate than cliv4**

Conclusion

- Presentation of several IV methods
- Proposition of an extended-IV method dedicated to the closed-loop case
- Formulation of the optimal closed-loop IV estimator
- Discussion on the choice of the design parameters to approximate the optimal closed-loop IV estimator

Tailor-made IV method = unbiased

but

To obtain attractive variance properties

apply bootstrap methods

IV methods for closed-loop system identification

Marion Gilson - **Paul Van den Hof**

Centre de Recherche en Automatique de Nancy

Delft Center for Systems and Control

SYSID - Rotterdam, Netherlands - 27 / 08 / 2003